ORIGINAL

Federal Communications Commission
Washington, D. C. 20554

Approved by OMB
3060-0627
Expires 01/31/98

FOR FCC USE ONLY

FCC 302-AM
APPLICATION FOR AM BROADCAST STATION LICENSE

(Please read instructions before filling out form.

FOR COMMISSION USE ONLY
FILE NO. BMML-20110124ADP

SECTION I - APPLICANT FEE INFORMATION

1. PAYOR NAME (Last, First, Middle Initial)
CBS Corporation

MAILING ADDRESS (Line 1) (Maximum 35 characters)
1800 K St NW STE 920

MAILING ADDRESS (Line 2) (Maximum 35 characters)

CITY	STATE OR COUNTRY (if foreign address)	ZIP CODE
Washington	DC	20006

TELEPHONE NUMBER (include area code)	CALL LETTERS	OTHER FCC IDENTIFIER (If applicable)
		ID # 6387

2. A. Is a fee submitted with this application? ☑ Yes ☐ No

B. If No, indicate reason for fee exemption (see 47 C.F.R. Section

☐ Governmental Entity ☐ Noncommercial educational licensee ☐ Other (Please explain):

C. If Yes, provide the following information:

Enter in Column (A) the correct Fee Type Code for the service you are applying for. Fee Type Codes may be found in the "Mass Media Services Fee Filing Guide." Column (B) lists the Fee Multiple applicable for this application. Enter fee amount due in Column (C).

(A) FEE TYPE CODE	(B) FEE MULTIPLE	(C) FEE DUE FOR FEE TYPE CODE IN COLUMN (A)	FOR FCC USE ONLY
M M R	0 0 0 1	$ 615	

To be used only when you are requesting concurrent actions which result in a requirement to list more than one Fee Type Code.

(A)	(B)	(C)	FOR FCC USE ONLY
M O R	0 0 0 1	$ 705	

ADD ALL AMOUNTS SHOWN IN COLUMN C, AND ENTER THE TOTAL HERE. THIS AMOUNT SHOULD EQUAL YOUR ENCLOSED REMITTANCE.

TOTAL AMOUNT REMITTED WITH THIS APPLICATION	FOR FCC USE ONLY
$ 1,320	

SECTION II - APPLICANT INFORMATION		
1. NAME OF APPLICANT CBS Radio Holdings Inc.		
MAILING ADDRESS 1800 K St NW Ste 920		
CITY Washington	STATE DC	ZIP CODE 20006

2. This application is for:

☑ Commercial ☐ Noncommercial

☐ AM Directional ☐ AM Non-Directional

Call letters	Community of License	Construction Permit File No.	Modification of Construction Permit File No(s).	Expiration Date of Last Construction Permit
KPTK FAC ID 6387	Seattle			

3. Is the station now operating pursuant to automatic program test authority in accordance with 47 C.F.R. Section 73.1620?

☑ Yes ☐ No

If No, explain in an Exhibit.

Exhibit No.

4. Have all the terms, conditions, and obligations set forth in the above described construction permit been fully met?

☐ Yes ☐ No

If No, state exceptions in an Exhibit.

Exhibit No.

5. Apart from the changes already reported, has any cause or circumstance arisen since the grant of the underlying construction permit which would result in any statement or representation contained in the construction permit application to be now incorrect?

☐ Yes ☐ No

If Yes, explain in an Exhibit.

Exhibit No.

6. Has the permittee filed its Ownership Report (FCC Form 323) or ownership certification in accordance with 47 C.F.R. Section 73.3615(b)?

☐ Yes ☐ No

☑ Does not apply

If No, explain in an Exhibit.

Exhibit No.

7. Has an adverse finding been made or an adverse final action been taken by any court or administrative body with respect to the applicant or parties to the application in a civil or criminal proceeding, brought under the provisions of any law relating to the following: any felony; mass media related antitrust or unfair competition; fraudulent statements to another governmental unit; or discrimination?

☐ Yes ☑ No

If the answer is Yes, attach as an Exhibit a full disclosure of the persons and matters involved, including an identification of the court or administrative body and the proceeding (by dates and file numbers), and the disposition of the litigation. Where the requisite information has been earlier disclosed in connection with another application or as required by 47 U.S.C. Section 1.65(c), the applicant need only provide: (i) an identification of that previous submission by reference to the file number in the case of an application, the call letters of the station regarding which the application or Section 1.65 information was filed, and the date of filing; and (ii) the disposition of the previously reported matter.

Exhibit No.

8. Does the applicant, or any party to the application, have a petition on file to migrate to the expanded band (1605-1705 kHz) or a permit or license either in the existing band or expanded band that is held in combination (pursuant to the 5 year holding period allowed) with the AM facility proposed to be modified herein?

☐ Yes ☑ No

If Yes, provide particulars as an Exhibit.

Exhibit No.

The APPLICANT hereby waives any claim to the use of any particular frequency or of the electromagnetic spectrum as against the regulatory power of the United States because use of the same, whether by license or otherwise, and requests and authorization in accordance with this application. (See Section 304 of the Communications Act of 1934, as amended).

The APPLICANT acknowledges that all the statements made in this application and attached exhibits are considered material representations and that all the exhibits are a material part hereof and are incorporated herein as set out in full in

CERTIFICATION

1. By checking Yes, the applicant certifies, that, in the case of an individual applicant, he or she is not subject to a denial of federal benefits that includes FCC benefits pursuant to Section 5301 of the Anti-Drug Abuse Act of 1988, 21 U.S.C. Section 862, or, in the case of a non-individual applicant (e.g., corporation, partnership or other unincorporated association), no party to the application is subject to a denial of federal benefits that includes FCC benefits pursuant to that section. For the definition of a "party" for these purposes, see 47 C.F.R. Section 1.2002(b).

☑ Yes ☐ No

2. I certify that the statements in this application are true, complete, and correct to the best of my knowledge and belief, and are made in good faith.

Name	Signature	
Jo Ann Haller	Jo Ann Haller	
Title	Date	Telephone Number
Senior Vice President	1/10/2011	202 457-4518

WILLFUL FALSE STATEMENTS ON THIS FORM ARE PUNISHABLE BY FINE AND/OR IMPRISONMENT (U.S. CODE, TITLE 18, SECTION 1001), AND/OR REVOCATION OF ANY STATION LICENSE OR CONSTRUCTION

FCC NOTICE TO INDIVIDUALS REQUIRED BY THE PRIVACY ACT AND THE PAPERWORK REDUCTION ACT

The solicitation of personal information requested in this application is authorized by the Communications Act of 1934, as amended. The Commission will use the information provided in this form to determine whether grant of the application is in the public interest. In reaching that determination, or for law enforcement purposes, it may become necessary to refer personal information contained in this form to another government agency. In addition, all information provided in this form will be available for public inspection. If information requested on the form is not provided, the application may be returned without action having been taken upon it or its processing may be delayed while a request is made to provide the missing information. Your response is required to obtain the requested authorization.

Public reporting burden for this collection of information is estimated to average 639 hours and 53 minutes per response, including the time for reviewing instructions, searching existing data sources, gathering and maintaining the data needed, and completing and reviewing the collection of information. Comments regarding this burden estimate or any other aspect of this collection of information, including suggestions for reducing the burden, can be sent to the Federal Communications Commission, Records Management Branch, Paperwork Reduction Project (3060-0627), Washington, D. C. 20554. Do NOT send completed forms to this address.

THE FOREGOING NOTICE IS REQUIRED BY THE PRIVACY ACT OF 1974, P.L. 93-579, DECEMBER 31, 1974, 5 U.S.C. 552a(e)(3), AND THE PAPERWORK REDUCTION ACT OF 1980, P.L. 96-511, DECEMBER 11, 1980, 44 U.S.C. 3507.

HATFIELD & DAWSON
CONSULTING ELECTRICAL ENGINEERS
9500 GREENWOOD AVE. N.
SEATTLE, WASHINGTON 98103

BENJAMIN F. DAWSON III, PE
THOMAS M. ECKELS, PE
STEPHEN S. LOCKWOOD, PE
DAVID J. PINION, PE
ERIK C. SWANSON, PE

THOMAS S. GORTON, PE
MICHAEL H. MEHIGAN, EIT

TELEPHONE (206) 783-9151
FACSIMILE (206) 789-9834
E-MAIL hatdaw@hatdaw.com

JAMES B. HATFIELD, PE
PAUL W. LEONARD, PE
CONSULTANTS

MAURY L. HATFIELD, PE
(1942-2009)

Engineering Report:

Application for License
Radio Station KPTK
1090 kHz, 50 kW, DA-2
Seattle, WA

Prepared for

CBS Radio Holdings, Inc.

12/2010

APPLICATION FOR LICENSE
Per Construction Permit BMP-20090713ABK

RADIO STATION KPTK-AM Seattle, WA
1090 kHz, 50.0 kW, DA-2
Facility ID #6387

	Purpose of Application
Item 1	Tower Impedance Measurements and Verification of Method of Moments Model
Item 2	Derivation of Operating Parameters for Directional Antenna
Item 3	Method of Moments Model Details for Towers Driven Individually
Item 4	Method of Moments Model Details for Directional Antenna
Item 5	Summary of Post Construction Certified Array Geometry
Item 6	Sampling System Measurements, Sample Device Description, Antenna Monitor Data
Item 7	Reference Field Strength Measurements
Item 8	Direct Measurement of Power
Appendix A	Certified Post Construction Array Geometry Survey
Appendix B	Construction Permit BMP-20090713ABK
Appendix C	FCC Form 302-AM

Purpose of Application

This engineering exhibit supports an application for license for the newly modified antenna radiation patterns of radio station KPTK, Seattle, WA . KPTK is authorized per construction permit BMP-20090713ABK to operate on 1090 kHz with a power of 50.0 kW using different directional antenna patterns for the daytime and nighttime operation.

The antenna towers and ground system are unmodified from their long-established conditions and adjustments of the antenna parameters were made in accordance with the terms of the construction permit and specifications that were provided in the application for construction permit. This antenna system is also employed by radio station KTTH, facility ID # 27023.

Information is provided herein demonstrating that the directional antenna parameters for the patterns authorized by the construction permit have been determined in accordance with the requirements of section 73.151(c) of the FCC Rules. The system has been adjusted to produce antenna monitor parameters within +/- 5 percent in ratio and +/- 3 degrees in phase of the modeled values, as required by the Rules.

Benjamin F. Dawson III P.E.

Item 1

Analysis of Tower Impedance Measurements to Verify Method of Moments Model - KPTK

Tower impedance measurements were made at the locations of the sample system voltage sample devices transformers using an HP 8751A network analyzer and directional coupler in a calibrated measurement system. The other towers were open circuited at the same point where impedance measurements were made (the "reference points") for each of the measurements.

The reference point in each ATU is also the junction point for three parallel resonant filter networks. As shown in the attached schematic, these networks are all parallel resonant at 1090 kHz (a "pole" in AC circuit description convention). These networks perform the function of isolating the 1090 kHz feed from the diplexed feed for the 770 kHz operation, isolating a reactance network which detunes the towers at 710 kHz providing protection to the nearby operation of KIRO on that frequency, and parallel resonating the isolation inductor for the sample line which extends up the towers to the formerly employed sample loops. These loops and the isolation inductor have been left in place so that the operation of the system is as unperturbed as possible, and because the isolation inductors are also the static ground for the antenna towers. Therefore all measurements were made with these three networks in place, and they were checked for proper parallel resonance conditions, that is, impedances well over an order of magnitude higher than the antenna measurements themselves. Circuit calculations were performed to relate the method of moments modeled impedances at the tower feedpoints to the voltage sample device locations as shown in the table. The Xoc shown for each tower which includes the assumed base and stray capacitances was used in the moment method model as a load at ground level for the open circuited case.

In addition to the page showing the schematic of the assumed circuit and tabulation of calculated values, a page showing the result of calculations using the NETBW circuit analysis program are shown. These calculations show the impedance transformations and phase shifts between the tower base values produced by the MININEC moment method model and the location of the voltage sample devices used to produce the antenna monitor input signals.

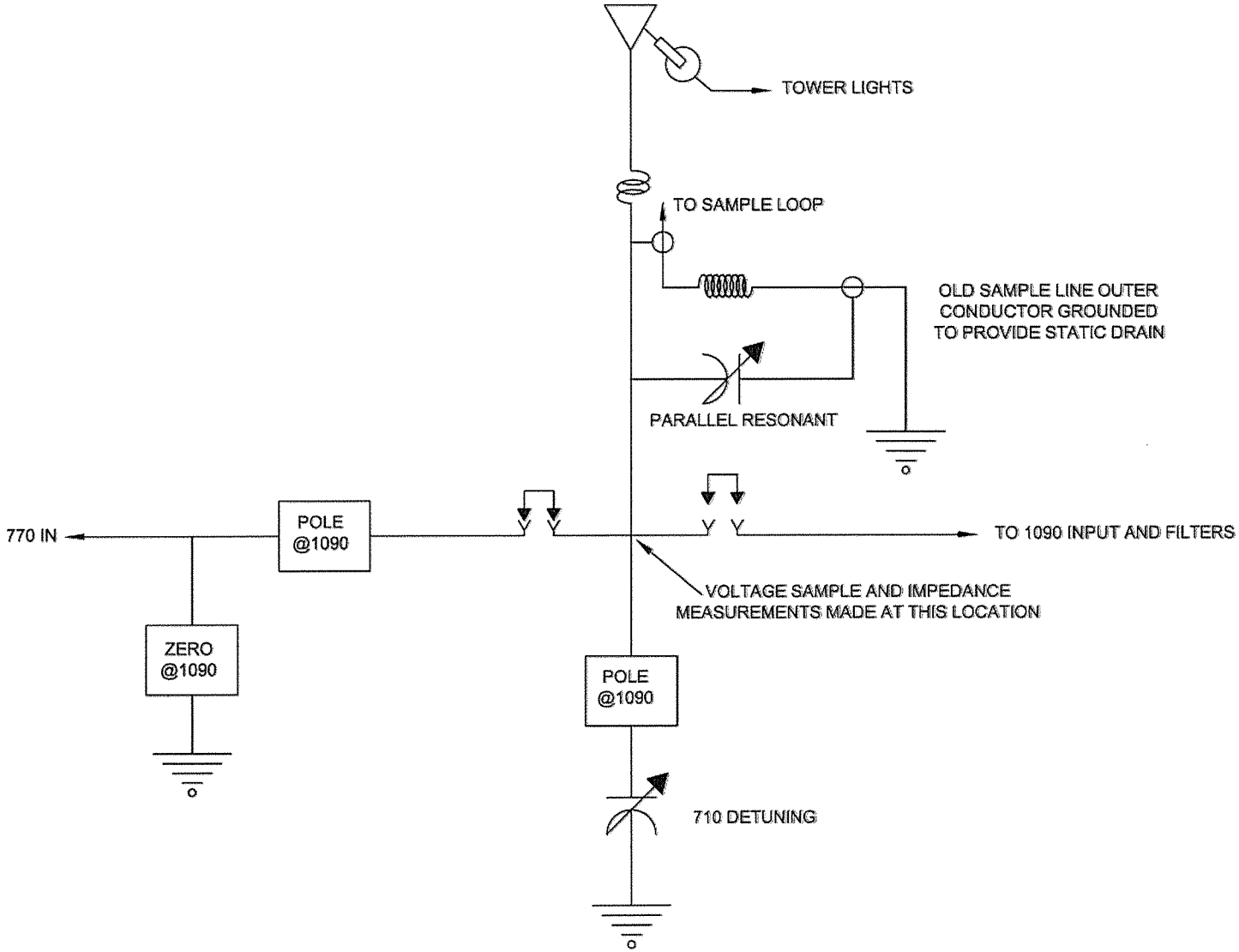

Hatfield & Dawson
Consulting Engineers

BASE REGION CONDITIONS

KPTK(AM) 1090 kHz (CBS) SEATTLE, WA 12/2010

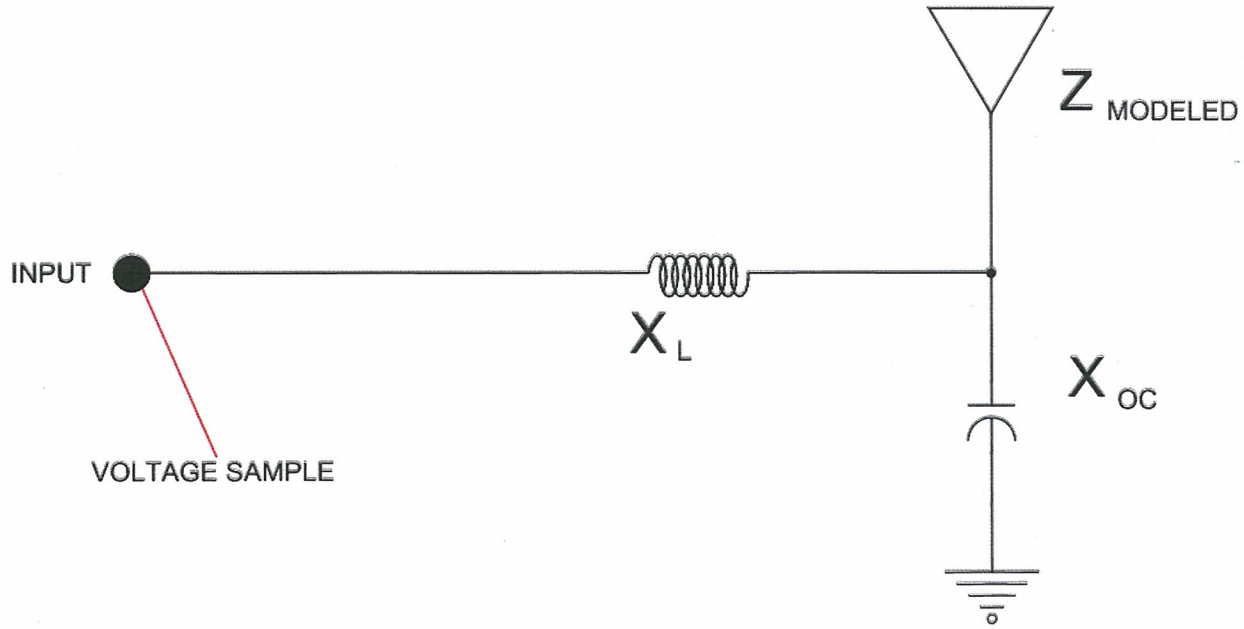

TOWER	X_L	X_{OC}*	$Z_{BASE\ MODELED}$	$Z_{ATU\ MODELED}$	$Z_{ATU\ MEASURED}$
1 NW	+j10	-j12000	633.45 -j348.92	596.59 -j359.7	620 -j370
2 C	+j10	-j12000	467.67 -j313.09	443.55 -j311.97	450 -j325
3 SE	+j10	-j12000	633.45 -j348.92	596.95 -j359.7	615 -j360

*NOTE: -j7135 IS MINIMUM REACTANCE ALLOWABLE per 73.151(c)(1)(viii)

Bob Allen, H&D 12/21/2010 10:29 AM KPTK CIRCUIT MOM TABLE.dwg

Hatfield & Dawson
Consulting Engineers

ANALYSIS OF TOWER IMPEDANCE MEASUREMENTS TO VERIFY METHOD OF MOMENTS MODEL

RADIO STATION KPTK 12/2010

Item 2

Derivation of Operating Parameters for Directional Antenna - KPTK

The method of moments model of the array, following verification with the measured individual open circuited base impedances, was used for directional antenna calculations. Calculations were made to determine the complex voltage values for sources located at ground level under each tower of the array to produce current moment sums for the towers that, when normalized, equated to the theoretical field parameters of the authorized directional antenna patterns. With these voltage sources, the tower currents and voltages were calculated. Twenty segments were used for towers in the moment method model. The currents and voltages at the tower bases (segments 1, 21, and 41) were used to calculate the currents and voltages at the sample device locations by Kirchoff's law, using the analysis program WCAP.

Tower	Modeled Current Pulse	Base Voltage Magnitude Normalized	Base Voltage Phase	Antenna Monitor Sample Ratio	Antenna Monitor Sample Phase
1 NW Day	1	0.897	26.9.°	0.906	26.7°
2 C Day	21	1.0	0.0°	1.000	0.0°
3 SE Day	41	0.634	122.1°	0.634	121.3°
1 NW Night	1	0.468	-72.2°	0.475	-71.5°
2 C Night	21	1.0	0.0°	1.000	0.0°
3 SE Night	41	0.487	71.6°	0.489	71.3°

Item 3

Method of Moments Model Details for Towers Driven Individually - KPTK

The array of towers was modeled using MININEC One wire was used to represent each tower. The top and bottom wire end points were specified using the theoretical directional antenna specifications in electrical degrees. The towers were modeled using 20 wire segments. As the towers are physically 160 degrees in electrical height, the segment lengths are 8 electrical degrees.

Each tower's modeled height relative to its physical height falls within the required range of 75 to 125 percent and each modeled radius falls within the required range of 80 percent to 150 percent of the radius of a circle having a circumference equal to the sum of the widths of the tower sides. The array consists of nearly identical, uniform cross section towers having a face width of 18 inches. Although the towers have identical leg and cross member sizes, the cross member geometry is not identical, since two were replacements after failure of the original towers some years ago.

Tower	Physical Height (degrees)	Modeled Height (degrees)	Modeled Percentage of Height	Modeled Radius (meters)	Percent of Equivalent Radius
1 NW	160.0	169.0	105.625	0.29	100.0
2 C	160.0	173.0	108.125	0.28	96.55
3 SE	160.0	169.0	105.625	0.29	100.0

The following pages show the details of the method of moments models for the individually driven towers. The numerals in the file names shown on the tabulations correspond to the tower numbers.

OUTPUT DATA FROM MOMENT METHOD PROGRAM
INPUT DATA FILE NAME 'KPTK6'

TOWERS #1 & 3 (END TOWERS)
IMPEDANCE
normalization = 50.

freq (KHz)	resist (ohms)	react (ohms)	imped (ohms)	phase (deg)	VSWR	S11 dB	S12 dB
source = 1; node 41, sector 1							
1,090.	633.45	-348.92	723.19	331.2	16.531	-1.0521	-6.6726

TOWER #2 (CENTER TOWER)
IMPEDANCE
normalization = 50.

freq (KHz)	resist (ohms)	react (ohms)	imped (ohms)	phase (deg)	VSWR	S11 dB	S12 dB
source = 1; node 21, sector 1							
1,090.	467.67	-313.09	562.8	326.2	13.579	-1.2817	-5.9252

SAMPLE PROGRAM OUTPUT FOR TOWER #2

GEOMETRY
Wire coordinates in degrees; other dimensions in meters
Environment: perfect ground

wire	caps	Distance	Angle	Z	radius	segs
1	none	0	0	0	.29	20
		0	0	169.		
2	none	138.	123.	0	.28	20
		138.	123.	173.		
3	none	276.	123.	0	.29	20
		276.	123.	169.		

Number of wires = 3
current nodes = 60

	minimum		maximum	
Individual wires	wire	value	wire	value
segment length	1	8.45	2	8.65
radius	2	.28	1	.29

ELECTRICAL DESCRIPTION
Frequencies (KHz)

no.	frequency lowest	step	no. of steps	segment length (wavelengths) minimum	maximum
1	1,090.	0	1	.0234722	.0240278

Sources

source	node	sector	magnitude	phase	type
1	21	1	1.	0	voltage

Lumped loads

load	node	resistance (ohms)	reactance (ohms)	inductance (mH)	capacitance (uF)	passive circuit
1	1	0	-12,000.	0	0	0
2	41	0	-12,000.	0	0	0

C:\CBS\1090 Seattle\kptk6center 12-10-2010 13:24:59

IMPEDANCE
normalization = 50.

freq (KHz)	resist (ohms)	react (ohms)	imped (ohms)	phase (deg)	VSWR	S11 dB	S12 dB
source = 1; node 21, sector 1							
1,090.	467.67	-313.09	562.8	326.2	13.579	-1.2817	-5.9252

C:\CBS\1090 Seattle\kptk6center 12-10-2010 13:24:59

CURRENT rms
Frequency = 1090 KHz
Input power = 50,000. watts
Efficiency = 100. %
coordinates in degrees

current no.	X	Y	Z	mag (amps)	phase (deg)	real (amps)	imaginary (amps)
GND	0	0	0	.246495	2.	.246345	8.59E-03
2	0	0	8.45	2.77173	2.	2.76996	.0990522
3	0	0	16.9	4.50245	2.1	4.49937	.166649
4	0	0	25.35	5.97447	2.2	5.97005	.229636
5	0	0	33.8	7.24024	2.3	7.23446	.289176
6	0	0	42.25	8.31009	2.4	8.30294	.344761
7	0	0	50.7	9.18132	2.5	9.1728	.395255
8	0	0	59.15	9.84734	2.6	9.83754	.439286
9	0	0	67.6	10.3016	2.6	10.2906	.47543
10	0	0	76.05	10.5391	2.7	10.5271	.502327
11	0	0	84.5	10.5578	2.8	10.5451	.518771
12	0	0	92.95	10.3585	2.9	10.3453	.523774
13	0	0	101.4	9.94547	3.	9.93204	.516607

14	0	0	109.85	9.32629	3.1	9.31305	.496827
15	0	0	118.3	8.51149	3.1	8.49882	.464287
16	0	0	126.75	7.51437	3.2	7.50267	.419111
17	0	0	135.2	6.34971	3.3	6.3394	.361645
18	0	0	143.65	5.03218	3.3	5.02368	.292336
19	0	0	152.1	3.5719	3.4	3.56563	.211457
20	0	0	160.55	1.96204	3.5	1.95847	.1183
END	0	0	169.	0	0	0	0
GND	-75.1602	-115.737	0	10.3399	33.8	8.59216	5.75225
22	-75.1602	-115.737	8.65	8.5832	4.9	8.55131	.73924
23	-75.1602	-115.737	17.3	8.87837	341.7	8.42963	-2.78692
24	-75.1602	-115.737	25.95	10.0998	324.6	8.2295	-5.85506
25	-75.1602	-115.737	34.6	11.6877	312.9	7.95489	-8.56283
26	-75.1602	-115.737	43.25	13.3149	304.9	7.61126	-10.9249
27	-75.1602	-115.737	51.9	14.802	299.1	7.20525	-12.9299
28	-75.1602	-115.737	60.55	16.0455	294.9	6.74471	-14.5591
29	-75.1602	-115.737	69.2	16.9812	291.6	6.23826	-15.7939
30	-75.1602	-115.737	77.85	17.568	288.9	5.69545	-16.6191
31	-75.1602	-115.737	86.5	17.7805	286.8	5.12611	-17.0256
32	-75.1602	-115.737	95.15	17.6058	284.9	4.54041	-17.0103
33	-75.1602	-115.737	103.8	17.0414	283.4	3.94852	-16.5776
34	-75.1602	-115.737	112.45	16.0937	282.1	3.36043	-15.7389
35	-75.1602	-115.737	121.1	14.7775	280.9	2.78569	-14.5125
36	-75.1602	-115.737	129.75	13.1139	279.8	2.23322	-12.9224
37	-75.1602	-115.737	138.4	11.129	278.8	1.71105	-10.9967
38	-75.1602	-115.737	147.05	8.84986	278.	1.22603	-8.76452
39	-75.1602	-115.737	155.7	6.29705	277.1	.783199	-6.24815
40	-75.1602	-115.737	164.35	3.46221	276.4	.384019	-3.44085
END	-75.1602	-115.737	173.	0	0	0	0
GND	-150.32	-231.473	0	.246495	2.	.246345	8.59E-03
42	-150.32	-231.473	8.45	2.77173	2.	2.76996	.099065
43	-150.32	-231.473	16.9	4.50246	2.1	4.49937	.16667
44	-150.32	-231.473	25.35	5.97447	2.2	5.97005	.229663
45	-150.32	-231.473	33.8	7.24024	2.3	7.23446	.28921
46	-150.32	-231.473	42.25	8.3101	2.4	8.30294	.344799
47	-150.32	-231.473	50.7	9.18132	2.5	9.1728	.395297
48	-150.32	-231.473	59.15	9.84734	2.6	9.83754	.439332
49	-150.32	-231.473	67.6	10.3016	2.6	10.2906	.475477
50	-150.32	-231.473	76.05	10.5391	2.7	10.5271	.502375
51	-150.32	-231.473	84.5	10.5578	2.8	10.5451	.51882
52	-150.32	-231.473	92.95	10.3585	2.9	10.3452	.523821
53	-150.32	-231.473	101.4	9.94547	3.	9.93204	.516651
54	-150.32	-231.473	109.85	9.32629	3.1	9.31305	.496869
55	-150.32	-231.473	118.3	8.51149	3.1	8.49882	.464325
56	-150.32	-231.473	126.75	7.51437	3.2	7.50267	.419145
57	-150.32	-231.473	135.2	6.34971	3.3	6.3394	.361673
58	-150.32	-231.473	143.65	5.03218	3.3	5.02368	.292359
59	-150.32	-231.473	152.1	3.5719	3.4	3.56563	.211473
60	-150.32	-231.473	160.55	1.96205	3.5	1.95848	.118309
END	-150.32	-231.473	169.	0	0	0	0

NETBW CALCULATION OF IMPEDANCE AT ATU OUTPUT (SAMPLE DEVICE LOCATION) AS MODIFIED BY BASE CAPACITANCE, FEED PIPE/SERIES CIRCUIT INDUCTANCE, AND STRAYS FOR ONE TOWER WITH THE OTHER TOWERS OPEN CIRCUITED. TOWER BASES LOADED WITH -J12000,

TOWER #1 NW

FREQUENCY (KHZ)	LOAD RESISTANCE	LOAD REACTANCE	INPUT RESISTANCE	INPUT REACTANCE
1090	633.45	-348.92	596.5895	-359.6639
-2.93647				

TOWER #2 CENTER

FREQUENCY (KHZ)	LOAD RESISTANCE	LOAD REACTANCE	INPUT RESISTANCE	INPUT REACTANCE
1090	467.67	-313.09	443.5492	-311.9756
-2.175136				

TOWER #3 SE

FREQUENCY (KHZ)	LOAD RESISTANCE	LOAD REACTANCE	INPUT RESISTANCE	INPUT REACTANCE
1090	633.45	-348.92	596.5895	-359.6639
-2.93647				

Item 4
Method of Moments Model Details for Directional Antenna- KPTK

The array of towers was modeled using MININEC with the individual tower characteristics that were verified by the individual tower impedance measurements. Calculations were made to determine the complex voltage values for sources located at ground level under each tower of the array to produce current moment sums for the towers that, when normalized, equated to the theoretical field parameters of the authorized directional antenna pattern. The following pages contain details of the method of moments model of the directional antenna patterns.

Tower	Wire	Base Node
1	1	1
2	2	21
3	3	41

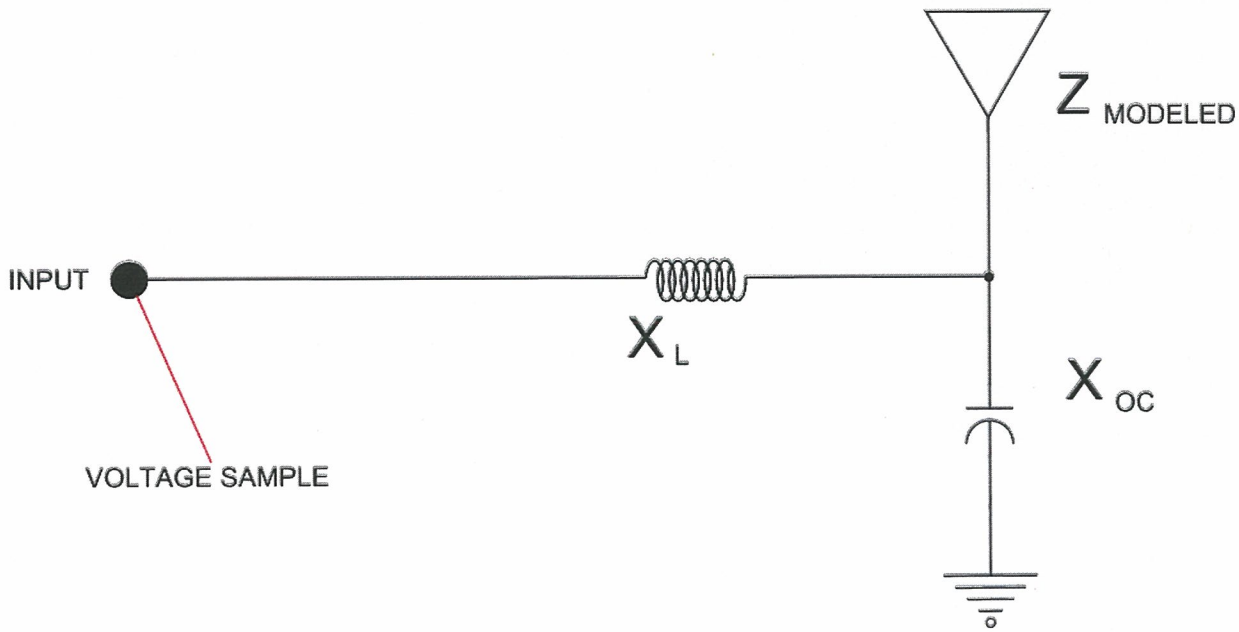

TOWER	X_L	X_{OC}	LOAD RESISTANCE AND REACTANCE	INPUT RESISTANCE AND REACTANCE	VOLTAGE PHASE CHANGE
1D	+j10	-j12000	801.4 +j137.7	816.4 +j94.1	-0.694°
2D	+j10	-j12000	507.5 -j244.0	486.6 -j249.3	-0.925°
3D	+j10	-j12000	352.8 -j1091	296.2 -j998.2	-0.155°
1N	+j10	-j12000	390.8 -j127.4	382.2 -j128.4	-1.34°
2N	+j10	-j12000	694.1 -j323.1	656.1 -j341.5	-0.683°
3N	+j10	-j12000	1394.9 -j299.7	1310.9 -j431.1	-0.395°

Bob Allen, H&D 12/21/2010 11:27 AM KPTK IMPEDANCE AND PHASE CHANGES TABLE.dwg

Hatfield & Dawson
Consulting Engineers

IMPEDANCE AND PHASE CHANGES DUE TO BASE CAPACITANCE AND SERIES HOOKUP INDUCTANCE

RADIO STATION KPTK 12/2010

DAY PATTERN MININEC OUTPUT

```
C:\CBS\1090 Seattle\kptk6day  11-11-2010   08:22:03

KPTK

GEOMETRY
Wire coordinates in degrees; other dimensions in meters
Environment: perfect ground

wire  caps Distance     Angle        Z            radius      segs
 1    none 0            0            0            .29          20
           0            0            169.
 2    none 138.         123.         0            .28          20
           138.         123.         173.
 3    none 276.         123.         0            .29          20
           276.         123.         169.

Number of wires          =  3
          current nodes  =  60

                        minimum                    maximum
Individual wires      wire    value              wire  value
segment length         1      8.45                2    8.65
radius                 2      .28                 1    .29


ELECTRICAL DESCRIPTION
Frequencies (KHz)
     frequency                  no. of  segment length (wavelengths)
 no. lowest       step          steps   minimum        maximum
 1   1,090.       0              1      .0234722       .0240278

Sources
source node    sector  magnitude      phase          type
 1      1       1      5,474.32       91.3           voltage
 2      21      1      6,105.65       64.4           voltage
 3      41      1      3,870.7        186.5          voltage

C:\CBS\1090 Seattle\kptk6day  11-11-2010   08:22:03

IMPEDANCE
   normalization = 50.
freq      resist   react    imped    phase    VSWR    S11      S12
(KHz)     (ohms)   (ohms)   (ohms)   (deg)            dB       dB
source =  1; node 1, sector 1
1,090.    801.43   137.69   813.17   9.7      16.503  -1.0539  -6.6661

source =  2; node 21, sector 1
1,090.    507.51   -244.03  563.13   334.3    12.516  -1.391   -5.6216

source =  3; node 41, sector 1
1,090.    352.75   -1,091.2 1,146.8  287.9    74.693  -.23259  -12.828


C:\CBS\1090 Seattle\kptk6day  11-11-2010   08:22:03

CURRENT rms
Frequency   = 1090 KHz
```

Input power = 50,000. watts
Efficiency = 100. %
coordinates in degrees

current no.	X	Y	Z	mag (amps)	phase (deg)	real (amps)	imaginary (amps)
GND	0	0	0	4.7603	81.5	.700105	4.70853
2	0	0	8.45	6.21971	50.	3.998	4.76453
3	0	0	16.9	7.85234	37.3	6.2448	4.76042
4	0	0	25.35	9.40771	30.1	8.14218	4.71274
5	0	0	33.8	10.7999	25.4	9.75983	4.62427
6	0	0	42.25	11.9882	22.	11.1128	4.49704
7	0	0	50.7	12.946	19.6	12.1993	4.3331
8	0	0	59.15	13.654	17.6	13.0129	4.13485
9	0	0	67.6	14.0987	16.1	13.5471	3.90506
10	0	0	76.05	14.2718	14.8	13.798	3.64688
11	0	0	84.5	14.1704	13.7	13.7653	3.36385
12	0	0	92.95	13.7959	12.8	13.4523	3.0598
13	0	0	101.4	13.1555	12.	12.8672	2.73885
14	0	0	109.85	12.26	11.3	12.0218	2.40524
15	0	0	118.3	11.1251	10.7	10.9321	2.06334
16	0	0	126.75	9.76914	10.1	9.61699	1.71743
17	0	0	135.2	8.21296	9.6	8.09763	1.37154
18	0	0	143.65	6.4768	9.1	6.39451	1.02919
19	0	0	152.1	4.57518	8.7	4.52245	.692608
20	0	0	160.55	2.50103	8.3	2.47486	.360828
END	0	0	169.	0	0	0	0
GND	-75.1602	-115.737	0	7.66666	90.1	-.0101666	7.66665
22	-75.1602	-115.737	8.65	6.88851	61.1	3.32542	6.03267
23	-75.1602	-115.737	17.3	7.41299	40.6	5.62989	4.82252
24	-75.1602	-115.737	25.95	8.44967	26.	7.59269	3.70783
25	-75.1602	-115.737	34.6	9.65463	16.	9.28104	2.6597
26	-75.1602	-115.737	43.25	10.8376	8.9	10.7071	1.67682
27	-75.1602	-115.737	51.9	11.8913	3.7	11.8665	.766976
28	-75.1602	-115.737	60.55	12.7503	359.7	12.7502	-.0589575
29	-75.1602	-115.737	69.2	13.373	356.6	13.3497	-.789554
30	-75.1602	-115.737	77.85	13.7322	354.1	13.6592	-1.41408
31	-75.1602	-115.737	86.5	13.8113	352.	13.6768	-1.92324
32	-75.1602	-115.737	95.15	13.6028	350.2	13.4052	-2.30969
33	-75.1602	-115.737	103.8	13.106	348.7	12.8519	-2.56831
34	-75.1602	-115.737	112.45	12.3274	347.4	12.0289	-2.69636
35	-75.1602	-115.737	121.1	11.2789	346.2	10.9526	-2.69349
36	-75.1602	-115.737	129.75	9.97725	345.1	9.6428	-2.56162
37	-75.1602	-115.737	138.4	8.44264	344.2	8.12203	-2.30451
38	-75.1602	-115.737	147.05	6.69589	343.3	6.4126	-1.92703
39	-75.1602	-115.737	155.7	4.75272	342.5	4.53151	-1.43311
40	-75.1602	-115.737	164.35	2.60705	341.7	2.47474	-.819981
END	-75.1602	-115.737	173.	0	0	0	0
GND	-150.32	-231.473	0	2.38664	258.5	-.474109	-2.33908
42	-150.32	-231.473	8.45	.734799	180.5	-.734775	-5.92E-03
43	-150.32	-231.473	16.9	1.85675	119.3	-.908624	1.61924
44	-150.32	-231.473	25.35	3.20576	109.1	-1.05145	3.02843
45	-150.32	-231.473	33.8	4.42592	105.3	-1.16875	4.26882
46	-150.32	-231.473	42.25	5.49541	103.3	-1.26177	5.3486
47	-150.32	-231.473	50.7	6.40321	102.	-1.33036	6.26349
48	-150.32	-231.473	59.15	7.13898	101.1	-1.37413	7.00548
49	-150.32	-231.473	67.6	7.69343	100.4	-1.39273	7.56631
50	-150.32	-231.473	76.05	8.05913	99.9	-1.38613	7.93903
51	-150.32	-231.473	84.5	8.23136	99.5	-1.35467	8.11913
52	-150.32	-231.473	92.95	8.2083	99.1	-1.29912	8.10485

53	-150.32	-231.473	101.4	7.99117	98.8	-1.22072	7.89738
54	-150.32	-231.473	109.85	7.58444	98.5	-1.12115	7.50112
55	-150.32	-231.473	118.3	6.99558	98.2	-1.0025	6.92338
56	-150.32	-231.473	126.75	6.23457	98.	-.867152	6.17397
57	-150.32	-231.473	135.2	5.31317	97.8	-.717726	5.26447
58	-150.32	-231.473	143.65	4.24332	97.5	-.556817	4.20663
59	-150.32	-231.473	152.1	3.0334	97.3	-.386563	3.00866
60	-150.32	-231.473	160.55	1.67735	97.1	-.207382	1.66448
END	-150.32	-231.473	169.	0	0	0	0

C:\CBS\1090 Seattle\kptk6day 12-10-2010 16:13:29

MEDIUM WAVE ARRAY SYNTHESIS FROM FIELD RATIOS

Frequency = 1090 KHz

tower	field ratio magnitude	phase (deg)
1	1.05	18.
2	1.	0
3	.55	101.

VOLTAGES AND CURRENTS - rms

source node	voltage magnitude	phase (deg)	current magnitude	phase (deg)
1	3,870.93	91.3	4.76028	81.5
21	4,317.34	64.4	7.66662	90.1
41	2,737.	186.5	2.38665	258.5

Sum of square of source currents = 174.267
Total power = 50,000. watts

TOWER ADMITTANCE MATRIX

admittance	real (mhos)	imaginary (mhos)
Y(1, 1)	.00106523	.000525808
Y(1, 2)	.00030633	-.000394262
Y(1, 3)	-.000269059	-3.3877E-05
Y(2, 1)	.000306325	-.000394263
Y(2, 2)	.00108678	.000663291
Y(2, 3)	.000306325	-.000394263
Y(3, 1)	-.000269059	-3.3877E-05
Y(3, 2)	.000306329	-.000394262
Y(3, 3)	.00106523	.00052581

TOWER IMPEDANCE MATRIX

impedance	real (ohms)	imaginary (ohms)
Z(1, 1)	627.178	-353.033
Z(1, 2)	143.78	259.757
Z(1, 3)	-10.1475	-85.6979
Z(2, 1)	143.779	259.759
Z(2, 2)	455.318	-320.006
Z(2, 3)	143.779	259.758
Z(3, 1)	-10.1477	-85.698
Z(3, 2)	143.781	259.756
Z(3, 3)	627.178	-353.033

NIGHT PATTERN MININEC OUTPUT

```
C:\CBS\1090 Seattle\kptk6nite  11-10-2010   15:50:34

KPTK nite

GEOMETRY
Wire coordinates in degrees; other dimensions in meters
Environment: perfect ground

wire  caps Distance     Angle        Z            radius      segs
 1    none 0            0            0            .29          20
           0            0            169.
 2    none 138.         123.         0            .28          20
           138.         123.         173.
 3    none 276.         123.         0            .29          20
           276.         123.         169.

Number of wires          =  3
          current nodes  =  60

                        minimum                    maximum
Individual wires      wire    value              wire  value
segment length         1      8.45               2    8.65
radius                 2      .28                1    .29


ELECTRICAL DESCRIPTION
Frequencies (KHz)
     frequency                  no. of  segment length (wavelengths)
 no. lowest        step         steps   minimum        maximum
 1   1,090.        0             1      .0234722       .0240278

Sources
source node    sector  magnitude      phase          type
 1      1       1      3,440.11       359.3          voltage
 2      21      1      7,343.47       71.5           voltage
 3      41      1      3,577.09       143.1          voltage

C:\CBS\1090 Seattle\kptk6nite  11-10-2010   15:50:34

IMPEDANCE
   normalization = 50.
freq     resist   react    imped    phase    VSWR    S11      S12
(KHz)    (ohms)   (ohms)   (ohms)   (deg)             dB       dB
source =  1; node 1, sector 1
1,090.   390.79   -127.4   411.03   341.9    8.6589  -2.0152  -4.3033

source =  2; node 21, sector 1
1,090.   694.12   -323.05  765.61   335.     16.902  -1.029   -6.7581

source =  3; node 41, sector 1
1,090.   1,394.9  299.72   1,426.8  12.1     29.188  -.59541  -8.924


C:\CBS\1090 Seattle\kptk6nite  11-10-2010   15:50:34

CURRENT rms
Frequency   = 1090 KHz
```

Input power = 50,000. watts
Efficiency = 100. %
coordinates in degrees

current no.	X	Y	Z	mag (amps)	phase (deg)	real (amps)	imaginary (amps)
GND	0	0	0	5.91804	17.3	5.64926	1.76324
2	0	0	8.45	5.60597	356.8	5.59696	-.317644
3	0	0	16.9	5.77394	342.3	5.50109	-1.75396
4	0	0	25.35	6.13375	330.9	5.35762	-2.98643
5	0	0	33.8	6.5714	321.9	5.16848	-4.05833
6	0	0	42.25	7.01129	314.8	4.93693	-4.97844
7	0	0	50.7	7.40164	309.1	4.66717	-5.74472
8	0	0	59.15	7.70679	304.5	4.36412	-6.35209
9	0	0	67.6	7.90218	300.7	4.0333	-6.79537
10	0	0	76.05	7.97139	297.5	3.68059	-7.0708
11	0	0	84.5	7.90415	294.8	3.3122	-7.1767
12	0	0	92.95	7.69542	292.4	2.93441	-7.11398
13	0	0	101.4	7.34419	290.3	2.55351	-6.88598
14	0	0	109.85	6.8534	288.5	2.17559	-6.49892
15	0	0	118.3	6.22901	286.9	1.80649	-5.9613
16	0	0	126.75	5.47951	285.4	1.45157	-5.28375
17	0	0	135.2	4.6151	284.	1.11565	-4.47822
18	0	0	143.65	3.6462	282.7	.802742	-3.55673
19	0	0	152.1	2.58031	281.5	.515652	-2.52826
20	0	0	160.55	1.41301	280.4	.254838	-1.38984
END	0	0	169.	0	0	0	0
GND	-75.1602	-115.737	0	6.7823	96.4	-.758816	6.73972
22	-75.1602	-115.737	8.65	6.32792	56.8	3.46468	5.29515
23	-75.1602	-115.737	17.3	7.66612	33.5	6.39524	4.22733
24	-75.1602	-115.737	25.95	9.47724	20.	8.90416	3.24563
25	-75.1602	-115.737	34.6	11.3169	11.9	11.0756	2.32424
26	-75.1602	-115.737	43.25	13.0064	6.5	12.924	1.46164
27	-75.1602	-115.737	51.9	14.4574	2.6	14.4421	.664351
28	-75.1602	-115.737	60.55	15.6174	359.8	15.6173	-.0584474
29	-75.1602	-115.737	69.2	16.4517	357.6	16.4369	-.697058
30	-75.1602	-115.737	77.85	16.9375	355.8	16.8919	-1.24238
31	-75.1602	-115.737	86.5	17.0617	354.3	16.9782	-1.68656
32	-75.1602	-115.737	95.15	16.8195	353.1	16.6973	-2.02339
33	-75.1602	-115.737	103.8	16.2136	352.	16.0569	-2.24855
34	-75.1602	-115.737	112.45	15.2542	351.1	15.0706	-2.35974
35	-75.1602	-115.737	121.1	13.9581	350.3	13.7577	-2.35671
36	-75.1602	-115.737	129.75	12.3472	349.5	12.1421	-2.24112
37	-75.1602	-115.737	138.4	10.4474	348.9	10.251	-2.01621
38	-75.1602	-115.737	147.05	8.28509	348.3	8.1117	-1.68614
39	-75.1602	-115.737	155.7	5.88009	347.7	5.74477	-1.25419
40	-75.1602	-115.737	164.35	3.2251	347.1	3.14421	-.717783
END	-75.1602	-115.737	173.	0	0	0	0
GND	-150.32	-231.473	0	1.77283	130.9	-1.16165	1.33921
42	-150.32	-231.473	8.45	3.06301	87.4	.13924	3.05984
43	-150.32	-231.473	16.9	4.35244	76.2	1.03857	4.22672
44	-150.32	-231.473	25.35	5.51254	70.8	1.81173	5.20631
45	-150.32	-231.473	33.8	6.52678	67.6	2.48579	6.03488
46	-150.32	-231.473	42.25	7.38661	65.5	3.06626	6.72012
47	-150.32	-231.473	50.7	8.08309	63.9	3.55183	7.26091
48	-150.32	-231.473	59.15	8.60789	62.8	3.93924	7.65364
49	-150.32	-231.473	67.6	8.95446	61.8	4.22514	7.89498
50	-150.32	-231.473	76.05	9.1184	61.1	4.40696	7.98273
51	-150.32	-231.473	84.5	9.09805	60.5	4.48337	7.91668
52	-150.32	-231.473	92.95	8.89469	59.9	4.45449	7.6989

53	-150.32	-231.473	101.4	8.51261	59.5	4.322	7.33382
54	-150.32	-231.473	109.85	7.95885	59.1	4.08916	6.82804
55	-150.32	-231.473	118.3	7.24319	58.7	3.76065	6.19042
56	-150.32	-231.473	126.75	6.3775	58.4	3.3424	5.43148
57	-150.32	-231.473	135.2	5.37504	58.1	2.84114	4.56279
58	-150.32	-231.473	143.65	4.24886	57.8	2.26357	3.5957
59	-150.32	-231.473	152.1	3.00822	57.5	1.61443	2.53831
60	-150.32	-231.473	160.55	1.64813	57.3	.890727	1.38671
END	-150.32	-231.473	169.	0	0	0	0

C:\CBS\1090 Seattle\kptk6nite 12-10-2010 16:18:06

MEDIUM WAVE ARRAY SYNTHESIS FROM FIELD RATIOS

Frequency = 1090 KHz

tower	field ratio magnitude	phase (deg)
1	.48	-55.
2	1.	0
3	.54	63.

VOLTAGES AND CURRENTS - rms

source node	voltage magnitude	phase (deg)	current magnitude	phase (deg)
1	2,432.52	359.3	5.91804	17.3
21	5,192.62	71.5	6.78229	96.4
41	2,529.39	143.1	1.77282	130.9

Sum of square of source currents = 168.331
Total power = 50,000. watts

TOWER ADMITTANCE MATRIX

admittance	real (mhos)	imaginary (mhos)
Y(1, 1)	.00106523	.000525808
Y(1, 2)	.00030633	-.000394262
Y(1, 3)	-.000269059	-3.3877E-05
Y(2, 1)	.000306325	-.000394263
Y(2, 2)	.00108678	.000663291
Y(2, 3)	.000306325	-.000394263
Y(3, 1)	-.000269059	-3.3877E-05
Y(3, 2)	.000306329	-.000394262
Y(3, 3)	.00106523	.00052581

TOWER IMPEDANCE MATRIX

impedance	real (ohms)	imaginary (ohms)
Z(1, 1)	627.178	-353.033
Z(1, 2)	143.78	259.757
Z(1, 3)	-10.1475	-85.6979
Z(2, 1)	143.779	259.759
Z(2, 2)	455.318	-320.006
Z(2, 3)	143.779	259.758
Z(3, 1)	-10.1477	-85.698
Z(3, 2)	143.781	259.756
Z(3, 3)	627.178	-353.033

KPTK BASE REGION IMPEDANCE AND PHASE TRANSFORMATIONS DUE TO BASE CAPACITANCE, FEED INDUCTANCE, AND STRAYS

FILE NAME = kptk1d.cir

R	.1000	1	2	.0000	.0000	.0000
R	**********	1	0	.0000	.0000	.0000
L	1.4600	2	3	.0000	.0000	.0000
C	.0000	3	0	.0000	.0000	.0000
R	801.4301	3	0	137.6900	.0000	.0000
I	1.0000	0	1	.0000	.0000	.0000
EX	.0000	0	0	.0000	.0000	.0000

FREQ = 1.090

NODE	VOLT MAG	VOLT PHASE
1	815.5741	6.5244
2	815.4755	6.5252
3	814.3989	5.8317

				BRANCH VOLTAGE		BRANCH CURRENT	FROM NODE IMPEDANCE		TO NODE IMPEDANCE		
				MAG	PHASE	MAG	PHASE	RESISTANCE	REACTANCE	RESISTANCE	REACTANCE	VSWR
R	1-	2	.100	.10	-.053	.99	-.053	816.89	94.19	816.79	94.19	
R	1-	0	100000.000	815.57	6.524	.01	6.524	100000.00	.00	.00	.00	
L	2-	3	1.460	9.92	89.949	.99	-.051	816.42	94.12	816.42	84.12	
C	3-	0	.000	814.40	5.832	.07	95.832	.00	-11997.84	.00	.00	
R	3-	0	801.430	814.40	5.832	1.00	-3.917	801.43	137.69	.00	.00	

FILE NAME = kptk2d.cir

R	.1000	1	2	.0000	.0000	.0000
R	**********	1	0	.0000	.0000	.0000
L	1.4600	2	3	.0000	.0000	.0000
C	.0000	3	0	.0000	.0000	.0000
R	507.5100	3	0	-244.0300	.0000	.0000
I	1.0000	0	1	.0000	.0000	.0000
EX	.0000	0	0	.0000	.0000	.0000

FREQ = 1.090

NODE	VOLT MAG	VOLT PHASE
1	544.3613	-26.9889
2	544.2727	-26.9937
3	548.8827	-27.9184

				BRANCH VOLTAGE MAG	BRANCH VOLTAGE PHASE	BRANCH CURRENT MAG	BRANCH CURRENT PHASE	FROM NODE IMPEDANCE RESISTANCE	FROM NODE IMPEDANCE REACTANCE	TO NODE IMPEDANCE RESISTANCE	TO NODE IMPEDANCE REACTANCE	VSWR
R	1-	2	.100	.10	.132	1.00	.132	486.70	-249.28	486.60	-249.28	
R	1-	0	100000.000	544.36	-26.989	.01	-26.989	100000.00	.00	.00	.00	
L	2-	3	1.460	9.95	90.136	1.00	.136	486.64	-249.34	486.64	-259.34	
C	3-	0	.000	548.88	-27.918	.05	62.082	.00	-11997.84	.00	.00	
R	3-	0	507.510	548.88	-27.918	.97	-2.238	507.51	-244.03	.00	.00	

FILE NAME = kptk3d.cir

R	.1000	1	2	.0000	.0000	.0000
R	**********	1	0	.0000	.0000	.0000
L	1.4600	2	3	.0000	.0000	.0000
C	.0000	3	0	.0000	.0000	.0000
R	352.7500	3	0	-1091.2000	.0000	.0000
I	1.0000	0	1	.0000	.0000	.0000
EX	.0000	0	0	.0000	.0000	.0000

FREQ = 1.090

NODE	VOLT MAG	VOLT PHASE
1	1038.2640	-72.9253
2	1038.2360	-72.9305
3	1047.7980	-73.0856

				BRANCH VOLTAGE MAG	BRANCH VOLTAGE PHASE	BRANCH CURRENT MAG	BRANCH CURRENT PHASE	FROM NODE IMPEDANCE RESISTANCE	FROM NODE IMPEDANCE REACTANCE	TO NODE IMPEDANCE RESISTANCE	TO NODE IMPEDANCE REACTANCE	VSWR
R	1-	2	.100	.10	.561	1.00	.561	295.90	-998.07	295.80	-998.07	
R	1-	0	100000.000	1038.26	-72.925	.01	-72.925	100000.00	.00	.00	.00	
L	2-	3	1.460	9.97	90.544	1.00	.544	296.16	-998.20	296.16	-1008.20	
C	3-	0	.000	1047.80	-73.086	.09	16.914	.00	-11997.84	.00	.00	
R	3-	0	352.750	1047.80	-73.086	.91	-1.000	352.75	-1091.20	.00	.00	

FILE NAME = kptk1n.cir

R	.1000	1	2	.0000	.0000	.0000
R	**********	1	0	.0000	.0000	.0000
L	1.4600	2	3	.0000	.0000	.0000
C	.0000	3	0	.0000	.0000	.0000
R	390.7900	3	0	-127.4000	.0000	.0000
I	1.0000	0	1	.0000	.0000	.0000
EX	.0000	0	0	.0000	.0000	.0000

FREQ = 1.090

NODE	VOLT MAG	VOLT PHASE
1	401.8375	-18.4918
2	401.7430	-18.4963
3	405.0253	-19.8324

			BRANCH VOLTAGE MAG	BRANCH VOLTAGE PHASE	BRANCH CURRENT MAG	BRANCH CURRENT PHASE	FROM NODE IMPEDANCE RESISTANCE	FROM NODE IMPEDANCE REACTANCE	TO NODE IMPEDANCE RESISTANCE	TO NODE IMPEDANCE REACTANCE	VSWR
R	1- 2	.100	.10	.070	1.00	.070	382.31	-128.38	382.21	-128.38	
R	1- 0	100000.000	401.84	-18.492	.00	-18.492	100000.00	.00	.00	.00	
L	2- 3	1.460	9.96	90.070	1.00	.070	382.22	-128.38	382.22	-138.38	
C	3- 0	.000	405.03	-19.832	.03	70.168	.00	-11997.84	.00	.00	
R	3- 0	390.790	405.03	-19.832	.99	-1.776	390.79	-127.40	.00	.00	

FILE NAME = kptk2n.cir

R	.1000	1	2	.0000	.0000	.0000
R	**********	1	0	.0000	.0000	.0000
L	1.4600	2	3	.0000	.0000	.0000
C	.0000	3	0	.0000	.0000	.0000
R	694.1200	3	0	-323.0500	.0000	.0000
I	1.0000	0	1	.0000	.0000	.0000
EX	.0000	0	0	.0000	.0000	.0000

FREQ = 1.090

NODE	VOLT MAG	VOLT PHASE
1	735.1722	-27.3105
2	735.0841	-27.3141
3	739.7249	-27.9968

				BRANCH VOLTAGE MAG	BRANCH VOLTAGE PHASE	BRANCH CURRENT MAG	BRANCH CURRENT PHASE	FROM NODE IMPEDANCE RESISTANCE	FROM NODE IMPEDANCE REACTANCE	TO NODE IMPEDANCE RESISTANCE	TO NODE IMPEDANCE REACTANCE	VSWR
R	1-	2	.100	.10	.194	.99	.194	656.24	-341.68	656.14	-341.68	
R	1-	0	100000.000	735.17	-27.311	.01	-27.311	100000.00	.00	.00	.00	
L	2-	3	1.460	9.94	90.185	.99	.185	656.11	-341.54	656.11	-351.54	
C	3-	0	.000	739.72	-27.997	.06	62.003	.00	-11997.84	.00	.00	
R	3-	0	694.120	739.72	-27.997	.97	-3.039	694.12	-323.05	.00	.00	

FILE NAME = kptk3n.cir

R	.1000	1	2	.0000	.0000	.0000
R	**********	1	0	.0000	.0000	.0000
L	1.4600	2	3	.0000	.0000	.0000
C	.0000	3	0	.0000	.0000	.0000
R	1394.9000	3	0	-299.7200	.0000	.0000
I	1.0000	0	1	.0000	.0000	.0000
EX	.0000	0	0	.0000	.0000	.0000

FREQ = 1.090

NODE	VOLT MAG	VOLT PHASE
1	1362.9820	-17.9706
2	1362.8880	-17.9719
3	1366.0050	-18.3654

				BRANCH VOLTAGE MAG	BRANCH VOLTAGE PHASE	BRANCH CURRENT MAG	BRANCH CURRENT PHASE	FROM NODE IMPEDANCE RESISTANCE	FROM NODE IMPEDANCE REACTANCE	TO NODE IMPEDANCE RESISTANCE	TO NODE IMPEDANCE REACTANCE	VSWR
R	1-	2	.100	.10	.248	.99	.248	1310.97	-431.49	1310.87	-431.49	
R	1-	0	100000.000	1362.98	-17.971	.01	-17.971	100000.00	.00	.00	.00	
L	2-	3	1.460	9.88	90.233	.99	.233	1310.86	-431.11	1310.86	-441.11	
C	3-	0	.000	1366.01	-18.365	.11	71.635	.00	-11997.84	.00	.00	
R	3-	0	1394.900	1366.01	-18.365	.96	-6.239	1394.90	-299.72	.00	.00	

Item 5

Summary of Post Construction Certified Array Geometry – KPTK

The KPTK antenna array was constructed during the 1940s. A survey was conducted in December 2010 by David Berg, a Registered Professional Land Surveyor in the State of Washington.

Tower	Specified Spacing (Degrees)	Specified Spacing (Feet)	Specified Azimuth (Degrees T)	Surveyed Spacing (Feet)	Surveyed Azimuth (Degrees T)	Distance From Specified Location (Feet)	Distance From Specified Location (Degrees)
1	138°	345.90	303°		303.006°	345.70	0.08°
2	Ref	Ref	0°	0	0°	Ref	0
3	138°	345.90	123°		123.006°	345.70	0.08°

The "as built" tower displacements from their specified locations expressed in electrical degrees at carrier frequency, which correspond to space phasing differences in the far-field radiation pattern of the array, are well below the +/- 1.5 degree specification for antenna tower location tolerance described in the FCC Public Notice DA 09-2340 (October 29, 2009).

Item 6

Sampling System Measurements – KPTK

The KPTK sample system has a single solid outer conductor foam insulated coaxial cable to each tower. At each tower the coaxial cable is directly connected to the voltage sample system described below.
Impedance measurements were made of the antenna monitor sampling system using a Hewlett-Packard 8751A network analyzer and a directional coupler in a calibrated measurement system. The measurements were made looking into the antenna monitor ends of the sampling lines for two conditions: with the far end open circuited for length and impedance determination, and with the voltage sampling device connected as in normal operation.

The following table shows the frequency closest to the carrier frequency where resonance, zero reactance corresponding with low resistance, was found. As frequencies of resonance occur at odd multiples of 90 degrees electrical length, the sampling line length of the resonant frequency below carrier frequency, which is the closest one to the carrier frequency, was found to be 450 electrical degrees. The electrical length at carrier frequency appearing in the table below was calculated by ratioing the carrier frequency to the resonant frequency.

Tower	Sampling Line Open-Circuited Resonance (kHz)	Sampling Line Electrical Length at 1090 kHz (Degrees)	1090 kHz Measured Impedance with Sample Device Connected
Tower 1(NW)	1057.9	354.2	30.7 +j35.4
Tower 2(C)	1058.0	354.2	32.4 +j36.5
Tower 3(SE)	1059.0	353.9	31.5 +j37.1

The sampling line lengths meet the requirement that they be equal in length within 1 electrical degree.

In order to determine the characteristic impedance values of the sampling lines, open-circuited measurements were made with frequencies offset to produce +/- 45 degrees of electrical length from resonance. The characteristic impedance was calculated using the following formula, where R1 +j X 1 and R2 +j X 2 are the measured impedances of the +45 and -45 degree offset frequencies, respectively:

$$Zo = ((R1^2 + X1^2)^{1/2} \times (R2^2 + X2^2)^{1/2})^{1/2}$$

Tower	-45° Offset Frequency (kHz)	-45° Measured Impedance (Ohms)	+45° Offset Frequency (kHz)	+45° Measured Impedance (Ohms)	Calculated Characteristic Impedance (Ohms)
1(NW)	952.11	10.1 –j49.4	1163.69	13.3 +j49.5	50.84
2(C)	952.2	10.0 –j49.4	1163.80	13.6 +j51.0	50.40
3(SE)	953.1	10.1 –j49.9	1164.90	13.8+j51.1	50.91

The sampling line measured characteristic impedances meet the requirement that they be equal within 2 Ohms.

The voltage sample devices were calibrated by measuring their outputs with the station's Potomac AM-19 antenna monitor. First, the antenna monitor was checked by comparing its readings with the amplitude and phase values obtained by use of the network analyzer, and found to agree within less than the accuracy of either instrument. Next, the three sample devices were placed side by side connected to the sample location at the center tower of the antenna array. The three voltage sample devices were connected to the input of the antenna monitor. The sample device vacuum capacitors were adjusted until each of the devices produced the same input values of phase and amplitude on the antenna monitor.

The sample devices are capacitive voltage dividers, arranged in accordance with the attached circuit diagram. No change in the antenna parameters for diplexed station KTTH occurred as a

result of their installation because of the relatively low drive impedances at its carrier frequency, 770 kHz, and the high impedance of the voltage sampling device.

The antenna monitor is a Potomac Instruments AM-19 (204). Its calibration was checked by comparison to the HP-8751 network analyzer, and found to agree within its specified accuracy.

Calibration of Sample Devices

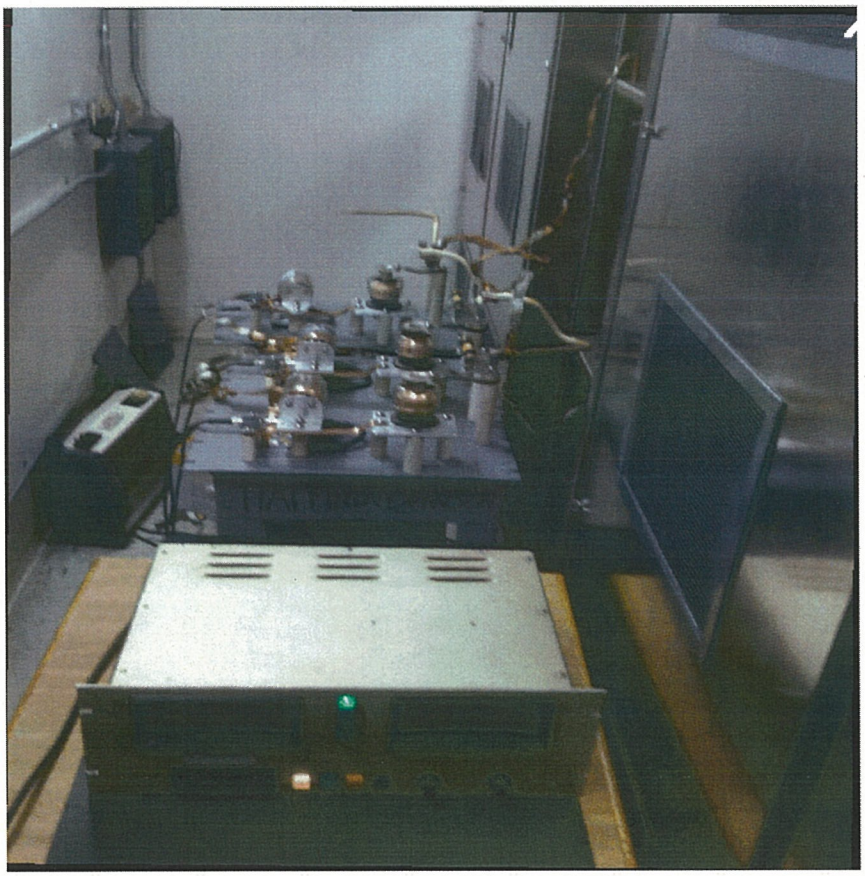

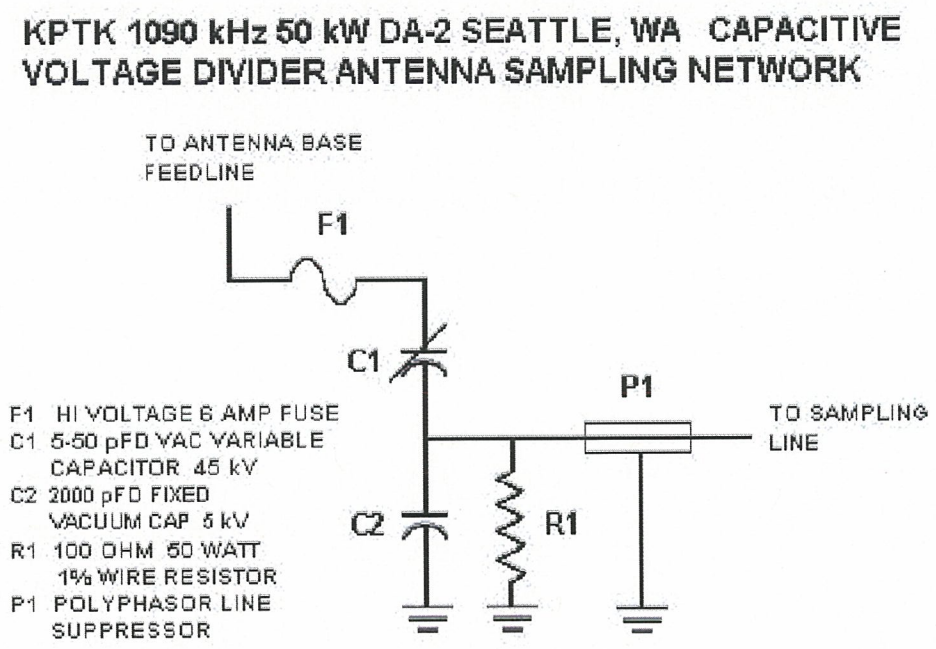

KPTK-AM Custom Capacitive Voltage Divider Antenna Sampling System

Purpose

To provide a voltage sample to drive the antenna monitor from each of the three towers that is representative of the operating amplitude and phase angles of the KPTK-AM DA-2 system. This Capacitive Voltage Sampling System replaces the Loop Sample System because the cross sections of one of the three towers is different, therefore disqualifying the system for a method of moments proof certification. The Capacitive Voltage Divider Sampling System will allow the KPTK-AM DA-2 array to qualify for the method of moments proof procedure.

System Description

The system consists of the following items:

1. A high voltage 6 amp fuse for lightning protection is installed between the tower base and the input of the variable vacuum capacitor.
2. A high voltage variable vacuum capacitor equivalent to a Jennings CAEC-30-35s, which was field adjusted to about 12 pF. to sufficiently drive the antenna monitor during all modes of operation.
3. A 2000 pF fixed vacuum capacitor equivalent to a Jennings CFDP2000-7.5S is in series with the 12 pF capacitor, where the low end is grounded to form a voltage divider, which completes the voltage divider step down.
4. A fixed wire wound 100 Ohm 5% resistor rated at 50 watts of continuous dissipation is in parallel with the 2000 pF capacitor to stabilize the voltage divider and create the final stepped-down RF voltage sample for the antenna monitor.
5. A coax style feed-through lightning arrestor by Polyphasor is inserted in series between the top of the 100 ohm resistor and the heliax sample line. This will further reduce lightning damage to the antenna monitor filters and input circuits. The output of the arrestor also provides an N female connection for the existing sample lines from each tower.

Physical Location and Electrical Operation

The point of connection for each sample unit is exactly the same. To protect the sample system, it was placed inside the existing cabinetry nearest the common connection to the base of each tower, where 1090 kHz and 770 kHz feed each tower. The RF Sample system is built on its own panel, and can be removed for verification of calibration and service.

The Capacitive voltage divider when used on the reference tower has to reduce the unmodulated voltage of about 10 kV to a safe voltage of about 10 volts, forming a 1000/1 RF voltage divider.

The very low internal resistance of the high voltage input fuse makes the voltage drop to the RF capacitive voltage divider insignificant under normal operation. However, if this fuse were to open, it will be instantly detectable, because the amplitude on the affected tower will be near zero. The fuse is mounted in clips and can be replaced easily.

The value of the HV variable capacitor was empirically determined to be about 12 pF. At 1090 kHz the 12 pF capacitor has a value of -j12,168 ohms. The value of the 2000 pF capacitor is -j73 ohms. That capacitor in parallel with the 100 resistor and the termination resistor in the antenna monitor results in an impedance value of 27.6 -j12.6 or 30.32 / -24.55 ohms. If 8000 volts of unmodulated RF voltage were applied to the reference tower the output voltage would be 19.9 volts.

Stability Concerns

The stability of the sample system, in its ability to deliver a stable and representative operating sampled voltage of each tower has been a concern. The system has been designed with the fewest possible components required. The components are of high quality and heavy duty in nature; Each sample system network is mounted on a sturdy metal base plate and designed for long life.

Only the Jennings CAEC-30-35s equivalent vacuum variable capacitor is considered a critical component in the sampling network assemblies. It presents a very high impedance in parallel with the tower base, which could create changes in the output sample voltage characteristics over extreme temperature variations. The 2000 pF shunt capacitor is effectively swamped by the 100 ohm resistor and the termination resistor of the antenna monitor, making any changes in the 5% CFDP2000-7.5S equivalent capacitor, negligible.

In researching specifications on the Jennings 0.5% CAEC-30-35S equivalent glass variable capacitor, it was found that its stability is 100 ppm/deg C over our expected normal operating temperature range of 0 to 130 degrees F. The unit was calibrated when the temperature was about 60 degrees F. Real-world testing of the divider system from late spring through summer into winter, has resulted in undetectable changes in phase and ratio of the three towers due to temperature. The reading for each tower was logged every quarter hour, along with the temperature of the tuning house under test. The results were reviewed to see if a change in ambient temperature changed the log readings. The slight changes noted were negligible and were mostly induced by incidental modulation.

Jennings data states: "Jennings vacuum capacitors are designed to meet MIL-C-23183 specifications which state that the absolute value of the capacitance change with temperature shall not exceed 1.1% over the applicable operating temperature range. In typical tests, values for ceramic capacitors show a stability within 50 ppm/°C and for glass capacitors, 100ppm/°C. Specific tests can be performed upon individual capacitors on special request."

We believe we have carefully designed, constructed and evaluated the performance of our sampling system and conclude that it will provide accurate and repeatable voltage samples for many years to come and will certainly remain stable over the course of the two year interval between required recertification.

Tom McGinley and Arne Skoog
KPTK-AM Engineering December, 2010

Item 7

Reference Field Strength Measurements - KTPK

Reference field strength measurements were made along radials at the azimuths with radiation values specified on the construction permit and additionally on the major lobe radials for both the daytime and nighttime directional patterns. Measurements were made with a Potomac Instruments model FIM-41, serial number 1717. This meter was most recently calibrated on June 22, 2001. Its readings were compared on December 21, 2010 to a Potomac Instruments model FIM-21 serial number 744 which is owned by Hatfield & Dawson and which was last calibrated on December 6, 2010, and the instruments indicated identically.

The measured field strengths, point descriptions, and measured coordinates (WGS-84) are shown on the following pages.

KPTK NIGHT PATTERN IMPROVEMENT PROJECT FIELD MEASUREMENT REFERENCE POINTS

Map Point	Bearing Degrees True	Distance in Kilometers	Day Date Time	Night Reading in mV/m	Geographical Coordinates N47	Geographical Coordinates W122	Point Description	DATUM WGS 84
			12/8/2010					
Pt 1	7.5	15.10	1:40 PM	258	31' 42.4"	23' 54.9"	Seattle; Lincoln Park "shore walk" at Telco cover	Y
Pt 2	7.5	20.00	12:18 PM	99	34' 20.1"	23' 23.8"	Seattle; 4521 SW Spokane St. space 2 in parking lot	Y
Pt 3	7.5	22.30	12:09 PM	95	35' 34.4"	23' 9.4"	Seattle; Hamilton View Point at large rock in flower bed	Y
			12/3/2010					
Pt 1	83	7.1	1:15 PM	7	24' 7.0"	19' 52.2"	Des Moines Marina N parking lot SW corner on Trash Can	Y
Pt 2	83	10.7	12:25 PM	4.3	24' 18.9"	17' 00.9"	King Co. condo complex unit 21906 40th at yellow posts	Y
Pt 3	83	11.7	12:35 PM	2.5	24' 22.9	16' 3.2"	King Co. Green River Natural Resource Park, NE parking lot	Y
			12/2/2010					
Pt 1	163	8.3	10:15 AM	16.5	19' 20.6"	23' 33.9"	Entrance, off of Dash point Road to Palisades Retreat Ctr @ Pvt Rd sign	Y
Pt 2	163	10.1	10:08 AM	9.5	18' 23.4	23' 08.1"	4030 SW 329th Pl. in front of house	Y
Pt 3	163	13.3	9:55 AM	7.5	16' 45.2"	22' 24.0	5507 56th Ave NE across street at road edge	Y
			12/9/2010					
Pt 1	303	2.3	12:57 PM	560	24' 17.0"	26' 59.7"	King Co. The triangle intersection at the "Pioneer Monument" at Monument Rd	Y
Pt 2	303	5.7	12:34 PM	115	25' 18.6"	29' 18.9"	King Co.12002 SW 204th St at the driveway	Y
Pt 3	303	7	12:18 PM	50	25' 40.9"	30' 12"	Westside Highway SW Past SW 131 AVE SW West side away from wires	Y

KPTK DAY PATTERN IMPROVEMENT PROJECT FIELD MEASUREMENT REFERENCE POINTS

Map Point	Bearing Degrees True	Distance in Kilometers	Day Date Time	Day Reading in mV/m	Geographical Coordinates N47	Geographical Coordinates W122	Point Description	DATUM WGS 84
			12/3/2010					
Pt 1	19	12.2	3:15 PM	208	29' 47.8"	22' 20.6"	Seattle; 11901 30th AVE SW End of street	Y
Pt 2	19	14.7	3:40 PM	140	31' 6.2"	21' 40.5	Seattle; 22 AVE SW Kelsey lane SW outside church lot on street	Y
Pt 3	19	17.2	3:55 PM	112	32' 24.5"	21' 00.4	Seattle; River View Play Field NW corner of W Tennis Court	Y
			12/3/2010					
Pt 1	66	6.7	1:10 PM	160	25' 5.8"	20' 34.5"	King Co.; SW 206th and 6th AVE SW at fire hydrant # 25	Y
Pt 2	66	11.3	1:36 PM	50	26' 5.4"	17' 15.9"	King Co.; S. 187th and 36th AVE S at man hole NE side of street	Y
Pt 3	66	14.7	1:53 PM	40	26' 49.6	14' 48.0	King Co.; N of Costco parking lot in front of E 1148 building	Y
			12/3/2010					
Pt 1	123	9.1	11:15 AM	118	20' 57.1"	19' 26.4"	Des Moines; 30 feet N of Salties Restaurant at sea wall next to stree	Y
Pt 2	123	11.9	11:52 AM	72	20' 11.6"	17' 42.9"	King Co.; 29601 S 296th ST manhole cover in ctr of intersection	Y
Pt 3	123	13.7	11:59 AM	44	19' 34.4"	16' 19.3"	King co.; in front of 30820 50th AVE S. at manhole cover in St.	Y
			12/9/2010					
Pt 1	180	2.6	1:10 PM	180	22' 14.3"	25' 29.7"	Maury Isl.; Gold Beach Drive S. of 259th SW in clear area	Y
			12/3/2010					
Pt 2	180	8.3	10:25 AM	122	19' 8.3"	25' 25.3"	Pierce Co.; Dash Pt county park at beach, on NW property line.	Y
Pt 3	180	10.6	10:52 AM	56	17' 55.7"	25' 29.5"	Pierce Co.; Marine View Drive, east of Heron Ridge Dr NE,@ rutted drive way	Y
			12/9/2010					
Pt 1	303	2.3	12:57 PM	185	24' 17.0"	26' 59.7"	King Co. The triangle intersection at the "Pioneer Monument" at Monument Rd	Y
Pt 2	303	5.7	12:34 PM	44	25' 18.6"	29' 18.9"	King Co.12002 SW 204th St at the driveway	Y
Pt 3	303	7	12:18 PM	19	25' 40.9"	30' 12"	Westside Highway SW Past SW 131AVE SW West side away from wires	Y

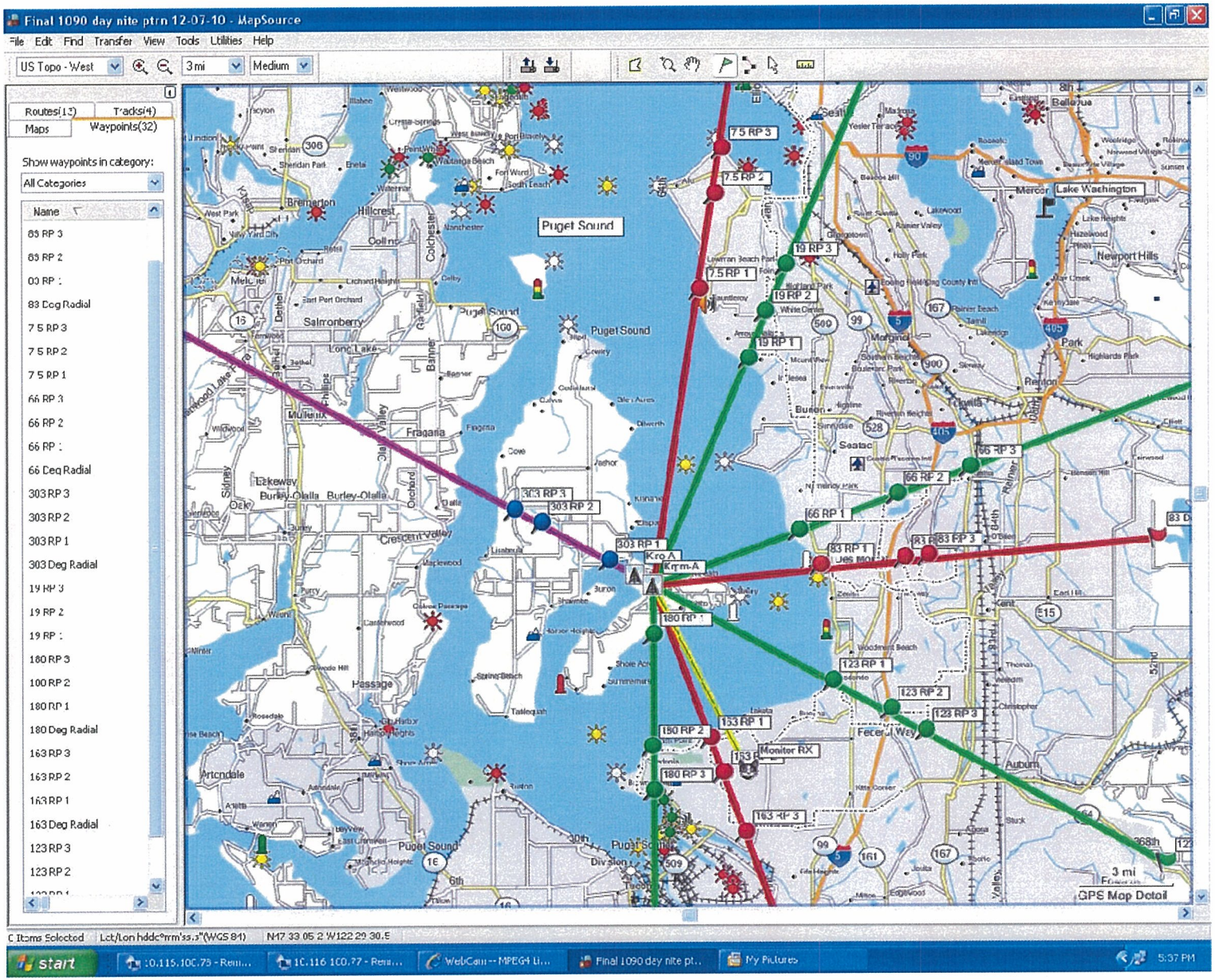
Final 1090 day nite ptrn 12-07-10 - MapSource
File Edit Find Transfer View Tools Utilities Help
US Topo - West
3 mi
Medium
Routes(13)
Tracks(4)
Maps
Waypoints(32)
Show waypoints in category:
All Categories
Name
83 RP 3
83 RP 2
83 RP 1
83 Deg Radial
7.5 RP 3
7.5 RP 2
7.5 RP 1
66 RP 3
66 RP 2
66 RP 1
66 Deg Radial
303 RP 3
303 RP 2
303 RP 1
303 Deg Radial
19 RP 3
19 RP 2
19 RP 1
180 RP 3
180 RP 2
180 RP 1
180 Deg Radial
163 RP 3
163 RP 2
163 RP 1
163 Deg Radial
123 RP 3
123 RP 2
Puget Sound
Lake Washington
Monitor RX
GPS Map Detail
start
My Pictures
5:37 PM

Item 8

Direct Measurement of Power - KPTK

Common point impedance measurements were made with a Hewlett-Packard 8751A network analyzer and a directional coupler in a calibrated measurement system. The measurements were made at the phasor cabinet input adjacent to the common point current meter used to determine operating power. The impedance measured at this point was adjusted to a value of 75 ohms +/- j0 for both the day and night common point networks.

KPTK RADIO TOWERS
MAURY ISLAND
KING COUNTY, WASHINGTON

THE DATA SHOWN HERE WAS DERIVED FROM A FIELD SURVEY PERFORMED 22, DEC. 2010, AND IS BASED ON KING COUNTY CONTROL DATABASE.

NAD 83\91

6, JAN. 2011

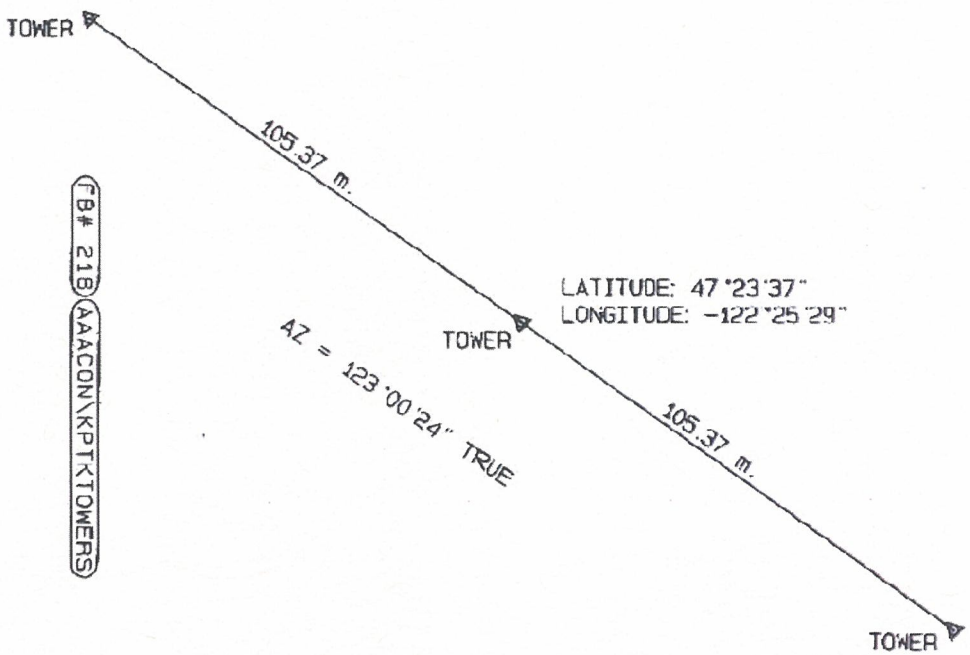

FB# 218 AACON\KPTKTOWERS

DAVID A. BERG
STATE OF WASHINGTON
11276
REGISTERED
PROFESSIONAL LAND SURVEYOR

D.A. BERG INC.
811 SO. 80TH ST.
TACOMA, WA. 98408
253.474.3208
FILE: 1210.0870

United States of America

FEDERAL COMMUNICATIONS COMMISSION
AM BROADCAST STATION CONSTRUCTION PERMIT

Authorizing Official:

Son Nguyen
Supervisory Engineer
Audio Division
Media Bureau

Grant Date: October 22, 2009

The authority granted herein has no effect on the expiration date of the underlying construction permit.

Official Mailing Address:

CBS RADIO HOLDINGS INC.
2175 K ST NW STE 350
WASHINGTON DC 20037

Facility Id: 6387

Call Sign: KPTK

Permit File Number: BMP-20090713ABK

Permit to modify BP-20071119AEZ by changing nighttime pattern.

Subject to the provisions of the Communications Act of 1934, as amended, subsequent acts and treaties, and all regulations heretofore or hereafter made by this Commission, and further subject to the conditions set forth in this permit, the permittee is hereby authorized to construct the radio transmitting apparatus herein described. Installation and adjustment of equipment not specifically set forth herein shall be in accordance with representations contained in the permittee's application for construction permit except for such modifications as are presently permitted, without application, by the Commission's Rules.

Commission rules which became effective on February 16, 1999, have a bearing on this construction permit. See Report & Order, Streamlining of Mass Media Applications, MM Docket No. 98-43, 13 FCC RCD 23056, Para. 77-90 (November 25, 1998); 63 Fed. Reg. 70039 (December 18, 1998). Pursuant to these rules, this construction permit will be subject to automatic forfeiture unless construction is complete and an application for license to cover is filed prior to expiration. See Section 73.3598.

Equipment and program tests shall be conducted only pursuant to Sections 73.1610 and 73.1620 of the Commission's Rules.

Hours of Operation: Unlimited

Average hours of sunrise and sunset:
Local Standard Time (Non-Advanced)

Jan.	8:00 AM	4:45 PM	Jul.	4:30 AM	8:00 PM
Feb.	7:15 AM	5:30 PM	Aug.	5:00 AM	7:30 PM
Mar.	6:30 AM	6:15 PM	Sep.	5:45 AM	6:30 PM
Apr.	5:30 AM	7:00 PM	Oct.	6:30 AM	5:30 PM
May	4:30 AM	7:45 PM	Nov.	7:15 AM	4:30 PM
Jun.	4:15 AM	8:15 PM	Dec.	7:45 AM	4:15 PM

Name of Permittee: CBS RADIO HOLDINGS INC.

Station Location: SEATTLE, WA

Frequency (kHz): 1090

Station Class: B

Antenna Coordinates:

	Day			
Latitude:	N	47 Deg	23 Min	38 Sec
Longitude:	W	122 Deg	25 Min	25 Sec

	Night			
Latitude:	N	47 Deg	23 Min	38 Sec
Longitude:	W	122 Deg	25 Min	25 Sec

Transmitter(s): Type Accepted. See Sections 73.1660, 73.1665 and 73.1670 of the Commission's Rules.

Nominal Power (kW): Day: 50.0 Night: 50.0

Antenna Mode: Day: DA Night: DA

(DA=Directional Antenna, ND=Non-directional Antenna; CH=Critical Hours)

Antenna Registration Number(s):

Day:

Tower No.	ASRN	Overall Height (m)
1	1037830	
2	1037829	
3	1037831	

Night:

Tower No.	ASRN	Overall Height (m)
1	1037830	
2	1037829	
3	1037831	

DESCRIPTION OF DIRECTIONAL ANTENNA SYSTEM

Theoretical RMS (mV/m/km): Day: 2435.27 Night: 2431.76

Standard RMS (mV/m/km): Day: 2558.1 Night: 2554.43

Augmented RMS (mV/m/km):

Q Factor: Day: Night:

Theoretical Parameters:

Day Directional Antenna:

Tower No.	Field Ratio	Phasing (Deg.)	Spacing (Deg.)	Orientation (Deg.)	Tower Ref Switch *	Height (Deg.)
1	1.0500	18.000	0.0000	0.000	0	160.0
2	1.0000	0.000	138.0000	123.000	0	160.0
3	0.5500	101.000	276.0000	123.000	0	160.0

* Tower Reference Switch
0 = Spacing and orientation from reference tower
1 = Spacing and orientation from previous tower

Theoretical Parameters:

Night Directional Antenna:

Tower No.	Field Ratio	Phasing (Deg.)	Spacing (Deg.)	Orientation (Deg.)	Tower Ref Switch *	Height (Deg.)
1	0.4800	-55.000	0.0000	0.000	0	160.0
2	1.0000	0.000	138.0000	123.000	0	160.0
3	0.5400	63.000	276.0000	123.000	0	160.0

* Tower Reference Switch
0 = Spacing and orientation from reference tower
1 = Spacing and orientation from previous tower

Inverse Distance Field Strength:

The inverse distance field strength at a distance of one kilometer from the above antenna in the directions specified shall not exceed the following values:

Day:

Azimuth:	Radiation:	
66	2203.2	mV/m
123	2317.4	mV/m
180	2203.2	mV/m
303	816.8	mV/m

Night:

Azimuth:	Radiation:	
83	135.31	mV/m
163	135.31	mV/m
303	2439.05	mV/m

Special operating conditions or restrictions:

1 The permittee must submit a proof of performance as set forth in either Section 73.151(a) or 73.151(c) of the rules before program tests are authorized.
A proof of performance based on field strength measurements, per Section 73.151(a), shall include a complete nondirectional proof of performance, in addition to a complete proof on the (day) and (night) directional antenna system. The nondirectional and directional field strength measurements must be made under similar environmental conditions. The proof(s) of performance submitted to the Commission must contain all of the data specified in Section 73.186 of the rules.
Permittees who elect to submit a moment method proof of performance, as set forth in Section 73.151(c), must use series-fed radiators. In addition, the sampling system must be constructed as described in Section 73.151(c) (2) (i).

2 Permittee shall install a type accepted transmitter, or submit application (FCC Form 301) along with data prescribed in Section 73.1660(b) should non-type accepted transmitter be proposed.

3 Licensee shall be responsible for satisfying all reasonable complaints of blanketing interference within the 1 V/m contour as required by Section 73.88 of the Commission's rules.

4 A license application (FCC Form 302) to cover this construction permit must be filed with the Commission pursuant to Section 73.3536 of the Rules before the permit expires on 3/14/2011.

Special operating conditions or restrictions:

5 Ground system consists of 120 equally spaced, buried, copper radials about the base of each tower, each 107 meters in length except where terminated by property boundaries or where intersecting radials are shortened and bonded to a transverse copper strap midway between adjacent towers.

*** END OF AUTHORIZATION ***

SECTION III - LICENSE APPLICATION ENGINEERING DATA

Name of Applicant

CBS RADIO HOLDINGS INC.

PURPOSE OF AUTHORIZATION APPLIED FOR: (check one)

[X] Station License [ ] Direct Measurement of Power

1. Facilities authorized in construction permit

Call Sign	File No. of Construction Permit (if applicable)	Frequency (kHz)	Hours of Operation	Power in kilowatts	
				Night	Day
KPTK	BMP-20090713ABK	1090	UNLIMITED	50.0	50.0

2. Station location

State	City or Town
WASHINGTON	SEATTLE

3. Transmitter location

State	County	City or Town	Street address (or other identification)
WA	KING	MAURY ISLAND	23410 DOCKTON RD. SW

4. Main studio location

State	County	City or Town	Street address (or other identification)
WA	KING	SEATTLE	1000 WESTLAKE AVENUE

5. Remote control point location (specify only if authorized directional antenna)

State	County	City or Town	Street address (or other identification)
WA	KING	SEATTLE	1000 WESTLAKE AVENUE

6. Has type-approved stereo generating equipment been installed? [ ] Yes [X] No

7. Does the sampling system meet the requirements of 47 C.F.R. Section 73.68? [X] Yes [ ] No [ ] Not Applicable

Attach as an Exhibit a detailed description of the sampling system as installed. Exhibit No. ENG. RPT.

8. Operating constants:

RF common point or antenna current (in amperes) without modulation for night system	RF common point or antenna current (in amperes) without modulation for day system
26.5 A	26.5 A

Measured antenna or common point resistance (in ohms) at operating frequency		Measured antenna or common point reactance (in ohms) at operating frequency	
Night	Day	Night	Day
75.0	75.0	+/- 0	+/- 0

Antenna indications for directional operation

Towers	Antenna monitor Phase reading(s) in degrees		Antenna monitor sample current ratio(s)		Antenna base currents	
	Night	Day	Night	Day	Night	Day
#1 NW	-71.5	26.7	0.475	0.906	NOT	REQUIRED
#2 C	0.0	0.0	1.0	1.0		
#3 SE	71.3	121.3	0.489	0.634		

Manufacturer and type of antenna monitor: POTOMAC INSTRUMENTS AM-19 (204)

SECTION III - Page 2

9. Description of antenna system ((f directional antenna is used, the information requested below should be given for each element of the array. Use separate sheets if necessary.)

Type Radiator	Overall height in meters of radiator above base insulator, or above base, if grounded.	Overall height in meters above ground (without obstruction lighting)	Overall height in meters above ground (include obstruction lighting)	If antenna is either top loaded or sectionalized, describe fully in an Exhibit.
UNIFORM CROSS SECTION GUYED TOWERS - ARN 1037829, -30, AND -31	122.3	123.1	124.0	Exhibit No. DNA

Excitation [X] Series [ ] Shunt

Geographic coordinates to nearest second. For directional antenna give coordinates of center of array. For single vertical radiator give tower location.

North Latitude	47°	23'	38"	West Longitude	122°	25'	25"

If not fully described above, attach as an Exhibit further details and dimensions including any other antenna mounted on tower and associated isolation circuits. Exhibit No. DNA

Also, if necessary for a complete description, attach as an Exhibit a sketch of the details and dimensions of ground system. Exhibit No. ON FILE

10. In what respect, if any, does the apparatus constructed differ from that described in the application for construction permit or in the permit?

NONE

11. Give reasons for the change in antenna or common point resistance.

MODIFICATION OF RADIATION PATTERNS PER BMP-20090713ABK

I certify that I represent the applicant in the capacity indicated below and that I have examined the foregoing statement of technical information and that it is true to the best of my knowledge and belief.

Name (Please Print or Type)	Signature (check appropriate box below)
BENJ. F. DAWSON III, P.E.	
Address (include ZIP Code)	Date
HATFIELD & DAWSON CONSULTING ENGINEERS 9500 GREENWOOD AVENUE NORTH SEATTLE, WA 98103 USA	DECEMBER 29, 2010
	Telephone No. (Include Area Code) 206 783 9151

[ ] Technical Director

[X] Registered Professional Engineer

[ ] Chief Operator

[ ] Technical Consultant

[X] Other (specify) CONSULTING ENGINEER