# Fletcher, Heald & Hildreth

HARRY F. COLE
ANNE GOODWIN CRUMP
PAUL J. FELDMAN
JEFFREY J. GEE
CHRISTINE GOEPP*
KEVIN M. GOLDBERG
FRANK R. JAZZO
M. SCOTT JOHNSON
DANIEL A. KIRKPATRICK
MITCHELL LAZARUS
STEPHEN T. LOVELADY*
SUSAN A. MARSHALL
HARRY C. MARTIN
MICHELLE A. McCLURE
MATTHEW H. McCORMICK
FRANCISCO R. MONTERO
LEE G. PETRO*
RAYMOND J. QUIANZON
JAMES P. RILEY
DAVINA SASHKIN
PETER TANNENWALD
KATHLEEN VICTORY
HOWARD M. WEISS

* NOT ADMITTED IN VIRGINIA

1300 NORTH 17th STREET, 11th FLOOR
ARLINGTON, VIRGINIA 22209

OFFICE: (703) 812-0400
FAX: (703) 812-0486
www.fhhlaw.com
www.commlawblog.com

RETIRED MEMBERS
VINCENT J. CURTIS, JR.
RICHARD HILDRETH
GEORGE PETRUTSAS

OF COUNSEL
ALAN C. CAMPBELL
THOMAS J. DOUGHERTY, JR.
DONALD J. EVANS
ROBERT M. GURSS*
RICHARD F. SWIFT

February 22, 2011

ANNE GOODWIN CRUMP, ESQ.
(703) 812-0426
CRIMP@FHHLAW.COM

RECEIVED
2011 MAR -2 P 2: 19
AUDIO SERVICES DIVISION

**BY FEDEX**
Federal Communications Commission
Media Bureau
P.O. Box 979089
St. Louis, MO 63197-9000

Re: Application for License to Cover Construction Permit
KCLE(AM), Facility ID No. 59263
Burleson, Texas

Dear Sir or Madam:

Transmitted herewith in triplicate, on behalf of M&M Broadcasters, Ltd., licensee of KCLE(AM), is its application for license to cover construction permit (File No. BP-20090716ACD) for modification of licensed facilities, together with FCC Form 159 reflecting a credit card payment to the Federal Communications Commission in the amount of $1,320.00 to cover the filing fees for the above-referenced license application.

Furthermore, the applicant hereby requests program test authority with the parameters specified in the license application.

FILE: M&M BROADCASTERS - BURLESON #3AM (06160-01)
W:\DOCS\Clients\06160\06160-01\00259595.DOCX

COPY

Please date-stamp the attached confirmation copy and return it to the courier. Should any questions arise concerning this matter, please communicate with this office.

Very truly yours,

Anne Goodwin Crump

Anne Goodwin Crump
Counsel for M&M Broadcasters, Ltd.

Enclosures

bcc: Mr. Gary L. Moss (with enclosure & copy of Form 159)*

*Please place a copy in the public inspection file.

Federal Communications Commission
Washington, D. C. 20554

Approved by OMB
3060-0627
Expires 01/31/98

FOR FCC USE ONLY

# FCC 302-AM
## APPLICATION FOR AM BROADCAST STATION LICENSE

(Please read instructions before filling out form.

FOR COMMISSION USE ONLY
FILE NO. BMML-20110223ACM

## SECTION I - APPLICANT FEE INFORMATION

1. PAYOR NAME (Last, First, Middle Initial)

M&M Broadcasters, Ltd.

MAILING ADDRESS (Line 1) (Maximum 35 characters)
P.O. Box 1629

MAILING ADDRESS (Line 2) (Maximum 35 characters)

| CITY | STATE OR COUNTRY (if foreign address) | ZIP CODE |
|---|---|---|
| Cleburne | TX | 76033 |

| TELEPHONE NUMBER (include area code) | CALL LETTERS | OTHER FCC IDENTIFIER (If applicable) |
|---|---|---|
| | | |

2. A. Is a fee submitted with this application? [✓] Yes [ ] No

B. If No, indicate reason for fee exemption (see 47 C.F.R. Section

[ ] Governmental Entity [ ] Noncommercial educational licensee [ ] Other (Please explain):

C. If Yes, provide the following information:

Enter in Column (A) the correct Fee Type Code for the service you are applying for. Fee Type Codes may be found in the "Mass Media Services Fee Filing Guide." Column (B) lists the Fee Multiple applicable for this application. Enter fee amount due in Column (C).

| (A) FEE TYPE CODE | (B) FEE MULTIPLE | (C) FEE DUE FOR FEE TYPE CODE IN COLUMN (A) | FOR FCC USE ONLY |
|---|---|---|---|
| M M R | 0 0 0 1 | $ 615.00 | |

To be used only when you are requesting concurrent actions which result in a requirement to list more than one Fee Type Code.

| (A) | (B) | (C) | FOR FCC USE ONLY |
|---|---|---|---|
| M O R | 0 0 0 1 | $ 705.00 | |

ADD ALL AMOUNTS SHOWN IN COLUMN C, AND ENTER THE TOTAL HERE. THIS AMOUNT SHOULD EQUAL YOUR ENCLOSED REMITTANCE.

| TOTAL AMOUNT REMITTED WITH THIS APPLICATION | FOR FCC USE ONLY |
|---|---|
| $ 1,320 | |

| SECTION II - APPLICANT INFORMATION | | |
|---|---|---|
| 1. NAME OF APPLICANT<br>M&M Broadcasters, LTD | | |
| MAILING ADDRESS<br>P. O. Box 1629 | | |
| CITY<br>Cleburne | STATE<br>Texas | ZIP CODE<br>76033-1629 |

2. This application is for:

☑ Commercial ☐ Noncommercial

☑ AM Directional ☐ AM Non-Directional

| Call letters | Community of License | Construction Permit File No. | Modification of Construction Permit File No(s). | Expiration Date of Last Construction Permit |
|---|---|---|---|---|
| KCLE | Burleson | BP20090716ACD | n/a | 05-06-2013 |

3. Is the station now operating pursuant to automatic program test authority in accordance with 47 C.F.R. Section 73.1620? ☐ Yes ☑ No

If No, explain in an Exhibit. N/A

4. Have all the terms, conditions, and obligations set forth in the above described construction permit been fully met? ☑ Yes ☐ No

If No, state exceptions in an Exhibit. Exhibit No.

5. Apart from the changes already reported, has any cause or circumstance arisen since the grant of the underlying construction permit which would result in any statement or representation contained in the construction permit application to be now incorrect? ☐ Yes ☑ No

If Yes, explain in an Exhibit. Exhibit No.

6. Has the permittee filed its Ownership Report (FCC Form 323) or ownership certification in accordance with 47 C.F.R. Section 73.3615(b)? ☐ Yes ☐ No ☑ Does not apply

If No, explain in an Exhibit. Exhibit No.

7. Has an adverse finding been made or an adverse final action been taken by any court or administrative body with respect to the applicant or parties to the application in a civil or criminal proceeding, brought under the provisions of any law relating to the following: any felony; mass media related antitrust or unfair competition; fraudulent statements to another governmental unit; or discrimination? ☐ Yes ☑ No

If the answer is Yes, attach as an Exhibit a full disclosure of the persons and matters involved, including an identification of the court or administrative body and the proceeding (by dates and file numbers), and the disposition of the litigation. Where the requisite information has been earlier disclosed in connection with another application or as required by 47 U.S.C. Section 1.65(c), the applicant need only provide: (i) an identification of that previous submission by reference to the file number in the case of an application, the call letters of the station regarding which the application or Section 1.65 information was filed, and the date of filing; and (ii) the disposition of the previously reported matter. Exhibit No.

8. Does the applicant, or any party to the application, have a petition on file to migrate to the expanded band (1605-1705 kHz) or a permit or license either in the existing band or expanded band that is held in combination (pursuant to the 5 year holding period allowed) with the AM facility proposed to be modified herein? ☐ Yes ☐ No

If Yes, provide particulars as an Exhibit. Exhibit No.

The APPLICANT hereby waives any claim to the use of any particular frequency or of the electromagnetic spectrum as against the regulatory power of the United States because use of the same, whether by license or otherwise, and requests and authorization in accordance with this application. (See Section 304 of the Communications Act of 1934, as amended).

The APPLICANT acknowledges that all the statements made in this application and attached exhibits are considered material representations and that all the exhibits are a material part hereof and are incorporated herein as set out in full in

## CERTIFICATION

1. By checking Yes, the applicant certifies, that, in the case of an individual applicant, he or she is not subject to a denial of federal benefits that includes FCC benefits pursuant to Section 5301 of the Anti-Drug Abuse Act of 1988, 21 U.S.C. Section 862, or, in the case of a non-individual applicant (e.g., corporation, partnership or other unincorporated association), no party to the application is subject to a denial of federal benefits that includes FCC benefits pursuant to that section. For the definition of a "party" for these purposes, see 47 C.F.R. Section 1.2002(b). ☐ Yes ☐ No

2. I certify that the statements in this application are true, complete, and correct to the best of my knowledge and belief, and are made in good faith.

| Name | Signature | |
|---|---|---|
| Gary L. Moss | Gary L. Moss | |
| Title: President of the General Partner | Date: 01/28/11 | Telephone Number: 817-645-6643 |

**WILLFUL FALSE STATEMENTS ON THIS FORM ARE PUNISHABLE BY FINE AND/OR IMPRISONMENT (U.S. CODE, TITLE 18, SECTION 1001), AND/OR REVOCATION OF ANY STATION LICENSE OR CONSTRUCTION**

FCC NOTICE TO INDIVIDUALS REQUIRED BY THE PRIVACY ACT AND THE PAPERWORK REDUCTION ACT

The solicitation of personal information requested in this application is authorized by the Communications Act of 1934, as amended. The Commission will use the information provided in this form to determine whether grant of the application is in the public interest. In reaching that determination, or for law enforcement purposes, it may become necessary to refer personal information contained in this form to another government agency. In addition, all information provided in this form will be available for public inspection. If information requested on the form is not provided, the application may be returned without action having been taken upon it or its processing may be delayed while a request is made to provide the missing information. Your response is required to obtain the requested authorization.

Public reporting burden for this collection of information is estimated to average 639 hours and 53 minutes per response, including the time for reviewing instructions, searching existing data sources, gathering and maintaining the data needed, and completing and reviewing the collection of information. Comments regarding this burden estimate or any other aspect of this collection of information, including suggestions for reducing the burden, can be sent to the Federal Communications Commission, Records Management Branch, Paperwork Reduction Project (3060-0627), Washington, D. C. 20554. Do NOT send completed forms to this address.

THE FOREGOING NOTICE IS REQUIRED BY THE PRIVACY ACT OF 1974, P.L. 93-579, DECEMBER 31, 1974, 5 U.S.C. 552a(e)(3), AND THE PAPERWORK REDUCTION ACT OF 1980, P.L. 96-511, DECEMBER 11, 1980, 44 U.S.C. 3507.

8. Does the applicant, or any party to the application, have a petition on file to migrate to the expanded band (1605-1705 kHz) or a permit or license either in the existing band or expanded band that is held in combination (pursuant to the 5 year holding period allowed) with the AM facility proposed to be modified herein? ☐ Yes ☑ No

If Yes, provide particulars as an Exhibit. Exhibit No.

The APPLICANT hereby waives any claim to the use of any particular frequency or of the electromagnetic spectrum as against the regulatory power of the United States because use of the same, whether by license or otherwise, and requests and authorization in accordance with this application. (See Section 304 of the Communications Act of 1934, as amended).

The APPLICANT acknowledges that all the statements made in this application and attached exhibits are considered material representations and that all the exhibits are a material part hereof and are incorporated herein as set out in full in

## CERTIFICATION

1. By checking Yes, the applicant certifies, that, in the case of an individual applicant, he or she is not subject to a denial of federal benefits that includes FCC benefits pursuant to Section 5301 of the Anti-Drug Abuse Act of 1988, 21 U.S.C. Section 862, or, in the case of a non-individual applicant (e.g., corporation, partnership or other unincorporated association), no party to the application is subject to a denial of federal benefits that includes FCC benefits pursuant to that section. For the definition of a "party" for these purposes, see 47 C.F.R. Section 1.2002(b). ☑ Yes ☐ No

2. I certify that the statements in this application are true, complete, and correct to the best of my knowledge and belief, and are made in good faith.

| Name | Signature | |
|---|---|---|
| Gary L. Moss | Gary L. Moss | |
| Title | Date | Telephone Number |
| President of the General Partner | 01/28/2011 | 817 645 6643 |

**WILLFUL FALSE STATEMENTS ON THIS FORM ARE PUNISHABLE BY FINE AND/OR IMPRISONMENT (U.S. CODE, TITLE 18, SECTION 1001), AND/OR REVOCATION OF ANY STATION LICENSE OR CONSTRUCTION**

FCC NOTICE TO INDIVIDUALS REQUIRED BY THE PRIVACY ACT AND THE PAPERWORK REDUCTION ACT

The solicitation of personal information requested in this application is authorized by the Communications Act of 1934, as amended. The Commission will use the information provided in this form to determine whether grant of the application is in the public interest. In reaching that determination, or for law enforcement purposes, it may become necessary to refer personal information contained in this form to another government agency. In addition, all information provided in this form will be available for public inspection. If information requested on the form is not provided, the application may be returned without action having been taken upon it or its processing may be delayed while a request is made to provide the missing information. Your response is required to obtain the requested authorization.

Public reporting burden for this collection of information is estimated to average 639 hours and 53 minutes per response, including the time for reviewing instructions, searching existing data sources, gathering and maintaining the data needed, and completing and reviewing the collection of information. Comments regarding this burden estimate or any other aspect of this collection of information, including suggestions for reducing the burden, can be sent to the Federal Communications Commission, Records Management Branch, Paperwork Reduction Project (3060-0627), Washington, D. C. 20554. Do NOT send completed forms to this address.

THE FOREGOING NOTICE IS REQUIRED BY THE PRIVACY ACT OF 1974, P.L. 93-579, DECEMBER 31, 1974, 5 U.S.C. 552a(e)(3), AND THE PAPERWORK REDUCTION ACT OF 1980, P.L. 96-511, DECEMBER 11, 1980, 44 U.S.C. 3507.

ORIGINAL

# Fletcher, Heald & Hildreth

HARRY F. COLE
ANNE GOODWIN CRUMP
PAUL J. FELDMAN
JEFFREY J. GEE
CHRISTINE GOEPP*
KEVIN M. GOLDBERG
FRANK R. JAZZO
M. SCOTT JOHNSON
DANIEL A. KIRKPATRICK
MITCHELL LAZARUS
STEPHEN T. LOVELADY*
SUSAN A. MARSHALL
HARRY C. MARTIN
MICHELLE A. McCLURE
MATTHEW H. McCORMICK
FRANCISCO R. MONTERO
LEE G. PETRO*
RAYMOND J. QUIANZON
JAMES P. RILEY
DAVINA SASHKIN
PETER TANNENWALD
KATHLEEN VICTORY
HOWARD M. WEISS

* NOT ADMITTED IN VIRGINIA

1300 NORTH 17th STREET, 11th FLOOR
ARLINGTON, VIRGINIA 22209

OFFICE: (703) 812-0400
FAX: (703) 812-0486
www.fhhlaw.com
www.commlawblog.com

RETIRED MEMBERS
VINCENT J. CURTIS, JR.
RICHARD HILDRETH
GEORGE PETRUTSAS

OF COUNSEL
ALAN C. CAMPBELL
THOMAS J. DOUGHERTY, JR.
DONALD J. EVANS
ROBERT M. GURSS*
RICHARD F. SWIFT

February 9, 2011

ANNE GOODWIN CRUMP, ESQ.
(703) 812-0426
CRIMP@FHHLAW.COM

**BY FEDEX**
Federal Communications Commission
Media Bureau
P.O. Box 979089
St. Louis, MO 63197-9000

Re: Application for License to Cover Construction Permit
KCLE(AM), Facility ID No. 59263
Burleson, Texas

Dear Sir or Madam:

Transmitted herewith in triplicate, on behalf of M&M Broadcasters, Ltd., licensee of KCLE(AM), is its application for license to cover construction permit (File No. BP-20090716ACD) for modification of licensed facilities, together with FCC Form 159 reflecting a credit card payment to the Federal Communications Commission in the amount of $1,320.00 to cover the filing fees for the above-referenced license application.

Furthermore, the applicant hereby requests program test authority with the parameters specified in the license application.

Please date-stamp the attached confirmation copy and return it to the courier. Should any questions arise concerning this matter, please communicate with this office.

Very truly yours,

Anne Goodwin Crump

Anne Goodwin Crump
Counsel for M&M Broadcasters, Ltd.

Enclosures

## SECTION III - LICENSE APPLICATION ENGINEERING DATA

Name of Applicant
M&M Broadcasters, LTD

PURPOSE OF AUTHORIZATION APPLIED FOR: (check one)

☑ Station License ☐ Direct Measurement of Power

1. Facilities authorized in construction permit

| Call Sign | File No. of Construction Permit (if applicable) | Frequency (kHz) | Hours of Operation | Power in kilowatts | |
|---|---|---|---|---|---|
| | | | | Night | Day |
| KCLE | | 1460 | Unlimited | .7 | 11 |

2. Station location

| State | City or Town |
|---|---|
| Texas | Burleson |

3. Transmitter location

| State | County | City or Town | Street address (or other identification) |
|---|---|---|---|
| TX | Tarrant | Rendon | FM1187 |

4. Main studio location

| State | County | City or Town | Street address (or other identification) |
|---|---|---|---|
| TX | Johnson | Cleburne | 919 N Main |

5. Remote control point location (specify only if authorized directional antenna)

| State | County | City or Town | Street address (or other identification) |
|---|---|---|---|
| TX | Johnson | Cleburne | 919 N Main |

6. Has type-approved stereo generating equipment been installed? ☐ Yes ☑ No

7. Does the sampling system meet the requirements of 47 C.F.R. Section 73.68? ☑ Yes ☐ No

☐ Not Applicable

Attach as an Exhibit a detailed description of the sampling system as installed. Exhibit No.

8. Operating constants:

| RF common point or antenna current (in amperes) without modulation for night system | RF common point or antenna current (in amperes) without modulation for day system |
|---|---|
| 3.88 | 15.22 |

| Measured antenna or common point resistance (in ohms) at operating frequency | | Measured antenna or common point reactance (in ohms) at operating frequency | |
|---|---|---|---|
| Night | Day | Night | Day |
| 50 | 50 | 0 | 0 |

Antenna indications for directional operation

| Towers | Antenna monitor Phase reading(s) in degrees | | Antenna monitor sample current ratio(s) | | Antenna base currents | |
|---|---|---|---|---|---|---|
| | Night | Day | Night | Day | Night | Day |
| 1 | 0 | 66.2 | 1 | .447 | | |
| 2 | -18.8 | 74.6 | .581 | .144 | | |
| 3 | | 0 | | 1 | | |
| | | | | | | |
| | | | | | | |
| | | | | | | |

Manufacturer and type of antenna monitor: Potomac Instruments AM 1901-3 SN 506

**SECTION III - Page 2**

9. Description of antenna system ((f directional antenna is used, the information requested below should be given for each element of the array. Use separate sheets if necessary.)

| Type Radiator | Overall height in meters of radiator above base insulator, or above base, if grounded. | Overall height in meters above ground (without obstruction lighting) | Overall height in meters above ground (include obstruction lighting) | If antenna is either top loaded or sectionalized, describe fully in an Exhibit. |
|---|---|---|---|---|
| uniform guyed tower | T1,T2 59.9 m, T3 48.8 m | T1,T2 60.9 m, T3 49.8 m | No lighting used or required | Exhibit No. n/a |

Excitation ☑ Series ☐ Shunt

Geographic coordinates to nearest second. For directional antenna give coordinates of center of array. For single vertical radiator give tower location.

| North Latitude | 32 ° | 34 ' | 43 " | West Longitude | 97 ° | 16 ' | 50 " |
|---|---|---|---|---|---|---|---|

If not fully described above, attach as an Exhibit further details and dimensions including any other antenna mounted on tower and associated isolation circuits. Exhibit No. See Technical Exhibit

Also, if necessary for a complete description, attach as an Exhibit a sketch of the details and dimensions of ground system. Exhibit No.

10. In what respect, if any, does the apparatus constructed differ from that described in the application for construction permit or in the permit?

NONE, See exhibit

11. Give reasons for the change in antenna or common point resistance.

n/a

I certify that I represent the applicant in the capacity indicated below and that I have examined the foregoing statement of technical information and that it is true to the best of my knowledge and belief.

| Name (Please Print or Type) | Signature (check appropriate box below) |
|---|---|
| Charles W. Staples | |
| Address (include ZIP Code) | Date |
| 4424 Glenwick Lane<br>University Park, TX 75205-1037 | 01/25/2011 |
| | Telephone No. (Include Area Code) |
| | 214 526 6200 |

☐ Technical Director

☐ Registered Professional Engineer

☐ Chief Operator

☑ Technical Consultant

☐ Other (specify)

**Engineering Exhibit**
**Application For License**
**BP-20090716ACD**
**M&M Broadcasters, LTD**
**KCLE (AM) 1460 kHz**
**11 kW DA-Day, .7 kW DA-Night**
**Facility ID 59263**
**Burleson, Texas**

## Background and Purpose of Application

M&M Broadcasters, LTD ("M&M") the licensee of KCLE has constructed the facility authorized by BP-20090716ACD and herby submits the application to license the facility. M&M has chosen to use the method of moments proof authorized under 47 CFR 73.151(c). The construction consisted of adding one tower to an existing two tower array, replacing phasing equipment, adding or replacing transmission line, sample line, ATUs, and ground system. The constructed site is as described in the above referenced construction permit. The towers utilized are three identical cross section twenty three inch face, (.5842 m) uniform guyed triangular towers. The original existing towers have a 59.9 meter radiator height. The tower 3, utilized for day only, is a 48.8 meter height radiator. Tower 3 is not used in the night array and is detuned with a 490.09 Ohm reactance. Tower 1 has a grid dish mounted at approximately 56 meters. The transmission line is bonded to the tower every twenty feet and crosses the base insulator with an Audio Lab ICR950 NF isocoupler.

## Methodology

Self impedances were measured at each tower, directly at the location where the feed is attached to the tower; with all other towers floated by disconnecting the feeds from the other towers. There were no other components shunted across the bases of the other towers with the exception of an isocoupler at tower 1. Towers in the array were modeled using Mininec Broadcast Professional Expert Version 23. Twenty segments were used to represent each of the three towers using the geometry of the array specified in the above

referenced construction permit. Each individual tower base impedance was calculated as a driven source with all other towers floating to obtain a modeled self-impedance at the tower base. The modeled values of the tower self impedance were then calculated to include the base components, such as stray capacitance of the Austin A4197L base insulator, and in the case of Tower 1, the isocoupler. All modeled values of were found to be equivalent to measured values within ±2 ohms and ±4 percent for both resistance and reactance of the measured self impedances. See the following the Verification of Modeling Exhibit for details and verification of the modeling procedure. Impedance measurements of the tower base self-impedances were measured using a Delta OIB-3 Bridge driven with approximately 200 Watts from the KCLE transmitter. Inductance of each tower feed was measured with this same equipment with the base of the tower under test shorted to obtain a measured value of feed inductance for each individual tower for use in base corrections of the directional towers.

After verification of the modeling procedure, the above mentioned computer program was use to create a method of moments model of the array for calculation of directional antenna system complex voltage values at ground level under each tower using the theoretical parameters of the day and night parameters in the above referenced construction permit. Using these voltage sources, current magnitudes and phases for each element of the array were derived for the day night arrays. Using the drive impedances from the array synthesis, the base and feed components were taken into consideration to calculate corrections for parameters at location of the current transformers in the ATU, using ECA, a computer nodal analysis program. The base components include the feed inductance, base capacitance, and static drain choke reactance. The static drain chokes utilized are extremely high reactance and in this case are slightly capacitive (-j8100 ohms at 1460 kHz) according to manufacturer's specifications. See Exhibit 2 for details of these calculations. These values of current and phase were normalized to the reference tower and corrected with the factors calculated above for antenna monitor parameters. See Exhibit 3 for

details of the calculations for values at the sampling point using this program and the final antenna monitor parameters specified on the Form 302AM.

Impedance measurements made of the sampling system were made with an Array Solutions AIM4170C network analyzer in a calibrated measurement system. Measurements were made at the antenna monitor end of the sample lines connected to the sampling transformers at the tower bases while under open circuit conditions. Additionally measurements were made at the antenna monitor end of the sample lines without the sample lines connected to the sampling transformers. Frequencies above and below carrier frequency where resonance occurred were determined with the sample lines disconnected from the transformers. As the length of a distortionless transmission line is 180 electrical degrees at the difference frequency between adjacent frequencies of resonance, and frequencies of resonance occur at odd multliples of 90 degrees electrical length, the sample line length at resonant frequency below or above carrier frequency (closest one to carrier frequency in terms of the ratio of frequencies) was found to be 90 degrees. The resonant frequency closer to the carrier frequency above carrier frequency at approximately 814 KHz was found to be 90 degrees. The lengths were calculated by the ratio of the frequencies. To determine characteristic impedance values of the lines, open circuit measurements were made with frequencies offset to produce $\pm$ 45 degrees of electrical line length at the resonant frequency (approximately 407 KHz and 1220 KHz). The characteristic impedance was calculated (using the equation $Z_0=(R^2_1+X_1^2)^{1/2} X (R_2^2+X_2^2))^{1/2})^{1/2}$ ) the electrical lengths of the sample lines was determined to be within .3° of each other. The characteristic impedance of the sample lines was within 2 ohms of the characteristic manufacturer's stated impedance of the line. The new sample transformers utilized were three Phasetek P600-202 .5V/A. They were removed from the new antenna tuning units, and tested utilizing a HP 8752A Network Analyzer and determined to be within .33% ratio and .35° accuracy. See Exhibit 4 for details of sample system measurements, antenna monitor sample transformer verification.

The site utilized two existing towers of the original KCLE towers, with a third tower added for day operation. See Exhibit 5 for a certified survey of the tower site that shows all towers are within .5 meter or less of the design location of the array of towers. The worst case error is less than 1 degree at 1.46 MHz.

See Exhibit 6 for reference measurements of both day and night patterns.

**M&M Broadcasters, LTD**
**KCLE (AM) 1460 kHz**
**Facility ID 59263**
**Burleson, Texas**

## Verification of Modeling

All towers are 23" (.58419 m) face width. This is equivalent to a radius of .2789 m. The minimum radius allowed to be used in the model, per 73.151(c) is .2231m. The .2231m radius was used for all three towers and is in compliance with the rule. Tower one is 105 electrical degrees and was modeled with 20 segments to be 110.7 degrees tall. Tower two is 105 electrical degrees and was modeled with 20 segments to be 109.5 electrical degrees. Tower three is 85.5 electrical degrees, was modeled with 20 segments to be 90.6 electrical degrees. All are in compliance with 73.151 (c).

### Tower One

The tower one self impedance was measured at the point where the feed attaches to the tower. The tower one measured self impedance equaled 100 + j150.3. The tower one modeled self impedance was 97.3 + j140. Tower one modeled self impedance was calculated including 20 pf of base insulator capacitance, and 10 pf of the isocoupler capacitance (total of –j3633.7) was = (97.3 +j140) (-j3633.7) / (97.3-j3493.7) = 105.2 +j142.7. The tolerance is (±2 ohms and ±4 percent per 73.151 (c)) is 6 ohms for resistance and 8 ohms for reactance and is in compliance with this rule.

### Tower Two

Tower two self Impedance was measured at the point where the feed attaches to the tower. The tower two measured self impedance equaled 96.5 +J138.6. The tower two modeled self impedance was 92.7 + j132. Tower two modeled self impedance calculated to include 20 pf of the base insulator capacitance (-j5450) was = (92.7+j132)(-j5450) / 92.7-j5318 = 97.3+j133.6. The tolerance is (±2 ohms and ±4 percent per 73.151 (c)) 5.86 ohms for resistance and 7.5 ohms for reactance and is in compliance with this rule.

### Tower Three

Tower three self impedance was measured at the point where the feed attaches to the tower. It equaled 36 +j26. The tower three modeled self impedance was 97.3+j25.4. Tower three modeled self impedance was calculated to include the 20 pf of the base insulator capacitance (-j5450) was = (97.3 +j25.4)(-j5450) / 37.3-j5424.6 = 37.6 +j25.3. The tolerance is (±2 ohms and ±4 percent per

73.151 (c)) 3.44 ohms for resistance and 3 ohms for reactance and is in compliance with this rule.

# M&M Broadcasters, LTD
# KCLE (AM) 1460 kHz
# Facility ID 59263
# Burleson, Texas

## KCLE Tower One Self Impedance

GEOMETRY
Wire coordinates in degrees; other dimensions in meters
Environment: perfect ground

| wire | caps | Radius | Angle | Z | radius | segs |
|---|---|---|---|---|---|---|
| 1 | none | 0 | 0 | 0 | .2231 | 20 |
| | | 0 | 0 | 110.7 | | |
| 2 | none | 198. | 238. | 0 | .2231 | 20 |
| | | 198. | 238. | 109.5 | | |
| 3 | none | 99. | 238. | 0 | .2231 | 20 |
| | | 99. | 238. | 90.6 | | |

Number of wires = 3
current nodes = 60

| | minimum | | maximum | |
|---|---|---|---|---|
| Individual wires | wire | value | wire | value |
| segment length | 1 | 5.535 | 3 | 4.53 |
| radius | 1 | .2231 | 1 | .2231 |

ELECTRICAL DESCRIPTION
Frequencies ( MHz)

| no. | frequency lowest | step | no. of steps | segment length (wavelengths) minimum | maximum |
|---|---|---|---|---|---|
| 1 | 1.46 | 0 | 1 | .0125833 | .015375 |

Sources

| source | node | sector | magnitude | phase | type |
|---|---|---|---|---|---|
| 1 | 1 | 1 | 1. | 0 | voltage |

Lumped loads

| load | node | resistance (ohms) | reactance (ohms) | inductance (mH) | capacitance (uF) | passive circuit |
|---|---|---|---|---|---|---|
| 1 | 1 | 0 | 0 | 0 | 0 | 0 |
| 2 | 21 | 0 | -5,450. | 0 | 0 | 0 |
| 3 | 41 | 0 | -5,450. | 0 | 0 | 0 |

IMPEDANCE
normalization = 50.

| freq (MHz) | resist (ohms) | react (ohms) | imped (ohms) | phase (deg) | VSWR dB | S11 dB | S12 dB |
|---|---|---|---|---|---|---|---|
| source = 1; node 1, sector 1 | | | | | | | |
| 1.46 | 97.253 | 139.96 | 170.43 | 55.21 | 6.3296 | -2.7677 | -11.281 |

CURRENT rms

Frequency = 1.46 MHz
Input power = .00167406 watts
Efficiency = 100. %

| current no. | X | Y | Z | mag (amps) | phase (deg) | real (amps) | imaginary (amps) |
|---|---|---|---|---|---|---|---|
| GND | 0 | 0 | 0 | 4.15E-03 | -55.21 | 2.37E-03 | -3.41E-03 |
| 2 | 0 | 0 | 5.535 | 4.51E-03 | -58.46 | 2.36E-03 | -3.85E-03 |
| 3 | 0 | 0 | 11.07 | 4.72E-03 | -60.31 | 2.34E-03 | -4.1E-03 |
| 4 | 0 | 0 | 16.605 | 4.86E-03 | -61.73 | 2.3E-03 | -4.28E-03 |
| 5 | 0 | 0 | 22.14 | 4.94E-03 | -62.9 | 2.25E-03 | -4.4E-03 |
| 6 | 0 | 0 | 27.675 | 4.97E-03 | -63.89 | 2.19E-03 | -4.46E-03 |
| 7 | 0 | 0 | 33.21 | 4.94E-03 | -64.75 | 2.11E-03 | -4.47E-03 |
| 8 | 0 | 0 | 38.745 | 4.87E-03 | -65.51 | 2.02E-03 | -4.43E-03 |
| 9 | 0 | 0 | 44.28 | 4.74E-03 | -66.2 | 1.91E-03 | -4.34E-03 |
| 10 | 0 | 0 | 49.815 | 4.57E-03 | -66.82 | 1.8E-03 | -4.2E-03 |
| 11 | 0 | 0 | 55.35 | 4.35E-03 | -67.38 | 1.67E-03 | -4.02E-03 |
| 12 | 0 | 0 | 60.885 | 4.1E-03 | -67.91 | 1.54E-03 | -3.79E-03 |
| 13 | 0 | 0 | 66.42 | 3.8E-03 | -68.39 | 1.4E-03 | -3.53E-03 |
| 14 | 0 | 0 | 71.955 | 3.46E-03 | -68.85 | 1.25E-03 | -3.22E-03 |
| 15 | 0 | 0 | 77.49 | 3.08E-03 | -69.28 | 1.09E-03 | -2.88E-03 |
| 16 | 0 | 0 | 83.025 | 2.67E-03 | -69.68 | 9.27E-04 | -2.5E-03 |
| 17 | 0 | 0 | 88.56 | 2.23E-03 | -70.07 | 7.59E-04 | -2.09E-03 |
| 18 | 0 | 0 | 94.095 | 1.75E-03 | -70.44 | 5.86E-04 | -1.65E-03 |
| 19 | 0 | 0 | 99.63 | 1.24E-03 | -70.8 | 4.08E-04 | -1.17E-03 |
| 20 | 0 | 0 | 105.165 | 6.89E-04 | -71.15 | 2.22E-04 | -6.52E-04 |
| END | 0 | 0 | 110.7 | 0 | 0 | 0 | 0 |
| GND | -104.924 | -167.914 | 0 | 3.25E-05 | 60.03 | 1.63E-05 | 2.82E-05 |
| 22 | -104.924 | -167.914 | 5.475 | 1.48E-04 | 60.01 | 7.41E-05 | 1.28E-04 |
| 23 | -104.924 | -167.914 | 10.95 | 2.19E-04 | 59.96 | 1.1E-04 | 1.9E-04 |
| 24 | -104.924 | -167.914 | 16.425 | 2.76E-04 | 59.9 | 1.38E-04 | 2.39E-04 |
| 25 | -104.924 | -167.914 | 21.9 | 3.23E-04 | 59.83 | 1.62E-04 | 2.79E-04 |
| 26 | -104.924 | -167.914 | 27.375 | 3.6E-04 | 59.76 | 1.81E-04 | 3.11E-04 |
| 27 | -104.924 | -167.914 | 32.85 | 3.9E-04 | 59.69 | 1.97E-04 | 3.36E-04 |
| 28 | -104.924 | -167.914 | 38.325 | 4.11E-04 | 59.6 | 2.08E-04 | 3.54E-04 |
| 29 | -104.924 | -167.914 | 43.8 | 4.24E-04 | 59.51 | 2.15E-04 | 3.65E-04 |
| 30 | -104.924 | -167.914 | 49.275 | 4.29E-04 | 59.42 | 2.18E-04 | 3.7E-04 |
| 31 | -104.924 | -167.914 | 54.75 | 4.27E-04 | 59.32 | 2.18E-04 | 3.67E-04 |
| 32 | -104.924 | -167.914 | 60.225 | 4.17E-04 | 59.22 | 2.14E-04 | 3.59E-04 |
| 33 | -104.924 | -167.914 | 65.7 | 4.E-04 | 59.11 | 2.06E-04 | 3.44E-04 |
| 34 | -104.924 | -167.914 | 71.175 | 3.76E-04 | 59. | 1.94E-04 | 3.22E-04 |
| 35 | -104.924 | -167.914 | 76.65 | 3.45E-04 | 58.88 | 1.78E-04 | 2.95E-04 |
| 36 | -104.924 | -167.914 | 82.125 | 3.07E-04 | 58.76 | 1.59E-04 | 2.62E-04 |
| 37 | -104.924 | -167.914 | 87.6 | 2.62E-04 | 58.63 | 1.37E-04 | 2.24E-04 |
| 38 | -104.924 | -167.914 | 93.075 | 2.11E-04 | 58.49 | 1.1E-04 | 1.8E-04 |
| 39 | -104.924 | -167.914 | 98.55 | 1.53E-04 | 58.34 | 8.04E-05 | 1.3E-04 |
| 40 | -104.924 | -167.914 | 104.025 | 8.69E-05 | 58.19 | 4.58E-05 | 7.38E-05 |
| END | -104.924 | -167.914 | 109.5 | 0 | 0 | 0 | 0 |
| GND | -52.462 | -83.9568 | 0 | 3.02E-05 | 162.46 | -2.88E-05 | 9.09E-06 |
| 42 | -52.462 | -83.9568 | 4.53 | 1.27E-04 | 162.45 | -1.21E-04 | 3.82E-05 |
| 43 | -52.462 | -83.9568 | 9.06 | 1.83E-04 | 162.45 | -1.74E-04 | 5.52E-05 |
| 44 | -52.462 | -83.9568 | 13.59 | 2.28E-04 | 162.44 | -2.17E-04 | 6.87E-05 |
| 45 | -52.462 | -83.9568 | 18.12 | 2.64E-04 | 162.43 | -2.52E-04 | 7.97E-05 |
| 46 | -52.462 | -83.9568 | 22.65 | 2.93E-04 | 162.43 | -2.79E-04 | 8.85E-05 |
| 47 | -52.462 | -83.9568 | 27.18 | 3.15E-04 | 162.42 | -3.01E-04 | 9.52E-05 |
| 48 | -52.462 | -83.9568 | 31.71 | 3.31E-04 | 162.41 | -3.16E-04 | 1.E-04 |
| 49 | -52.462 | -83.9568 | 36.24 | 3.41E-04 | 162.4 | -3.25E-04 | 1.03E-04 |
| 50 | -52.462 | -83.9568 | 40.77 | 3.44E-04 | 162.4 | -3.28E-04 | 1.04E-04 |

| | | | | | | | |
|---|---|---|---|---|---|---|---|
| 51 | -52.462 | -83.9568 | 45.3 | 3.42E-04 | 162.39 | -3.26E-04 | 1.03E-04 |
| 52 | -52.462 | -83.9568 | 49.83 | 3.34E-04 | 162.38 | -3.18E-04 | 1.01E-04 |
| 53 | -52.462 | -83.9568 | 54.36 | 3.2E-04 | 162.38 | -3.05E-04 | 9.69E-05 |
| 54 | -52.462 | -83.9568 | 58.89 | 3.01E-04 | 162.38 | -2.87E-04 | 9.12E-05 |
| 55 | -52.462 | -83.9568 | 63.42 | 2.77E-04 | 162.38 | -2.64E-04 | 8.37E-05 |
| 56 | -52.462 | -83.9568 | 67.95 | 2.47E-04 | 162.38 | -2.35E-04 | 7.47E-05 |
| 57 | -52.462 | -83.9568 | 72.48 | 2.11E-04 | 162.38 | -2.02E-04 | 6.4E-05 |
| 58 | -52.462 | -83.9568 | 77.01 | 1.71E-04 | 162.38 | -1.63E-04 | 5.18E-05 |
| 59 | -52.462 | -83.9568 | 81.54 | 1.25E-04 | 162.38 | -1.19E-04 | 3.77E-05 |
| 60 | -52.462 | -83.9568 | 86.07 | 7.16E-05 | 162.38 | -6.82E-05 | 2.17E-05 |
| END | -52.462 | -83.9568 | 90.6 | 0 | 0 | 0 | 0 |

**M&M Broadcasters, LTD**
**KCLE (AM) 1460 kHz**
**Facility ID 59263**
**Burleson, Texas**

## KCLE Tower Two Self Impedance

GEOMETRY
Wire coordinates in degrees; other dimensions in meters
Environment: perfect ground

| wire | caps | Radius | Angle | Z | radius | segs |
|---|---|---|---|---|---|---|
| 1 | none | 0 | 0 | 0 | .2231 | 20 |
| | | 0 | 0 | 110.7 | | |
| 2 | none | 198. | 238. | 0 | .2231 | 20 |
| | | 198. | 238. | 109.5 | | |
| 3 | none | 99. | 238. | 0 | .2231 | 20 |
| | | 99. | 238. | 90.6 | | |

Number of wires = 3
current nodes = 60

| | minimum | | maximum | |
|---|---|---|---|---|
| Individual wires | wire | value | wire | value |
| segment length | 1 | 5.535 | 3 | 4.53 |
| radius | 1 | .2231 | 1 | .2231 |

ELECTRICAL DESCRIPTION
Frequencies ( MHz)

| | frequency | | no. of | segment length (wavelengths) | |
|---|---|---|---|---|---|
| no. | lowest | step | steps | minimum | maximum |
| 1 | 1.46 | 0 | 1 | .0125833 | .015375 |

Sources

| source | node | sector | magnitude | phase | type |
|---|---|---|---|---|---|
| 1 | 21 | 1 | 1. | 0 | voltage |

Lumped loads

| load | node | resistance (ohms) | reactance (ohms) | inductance (mH) | capacitance (uF) | passive circuit |
|---|---|---|---|---|---|---|
| 1 | 1 | 0 | -3,633.7 | 0 | 0 | 0 |
| 2 | 21 | 0 | 0 | 0 | 0 | 0 |
| 3 | 41 | 0 | -5,450. | 0 | 0 | 0 |

IMPEDANCE
normalization = 50.

| freq (MHz) | resist (ohms) | react (ohms) | imped (ohms) | phase (deg) | VSWR dB | S11 dB | S12 dB |
|---|---|---|---|---|---|---|---|
| source = 1; node 21, sector 1 | | | | | | | |
| 1.46 | 92.675 | 131.99 | 161.28 | 54.93 | 5.9858 | -2.9296 | -10.864 |

CURRENT rms
Frequency = 1.46 MHz
Input power = .00178147 watts
Efficiency = 100. %

| current no. | X | Y | Z | mag (amps) | phase (deg) | real (amps) | imaginary (amps) |
|---|---|---|---|---|---|---|---|
| GND | 0 | 0 | 0 | 5.23E-05 | 59.71 | 2.64E-05 | 4.52E-05 |
| 2 | 0 | 0 | 5.535 | 1.77E-04 | 59.68 | 8.94E-05 | 1.53E-04 |
| 3 | 0 | 0 | 11.07 | 2.54E-04 | 59.64 | 1.28E-04 | 2.19E-04 |
| 4 | 0 | 0 | 16.605 | 3.15E-04 | 59.58 | 1.59E-04 | 2.72E-04 |
| 5 | 0 | 0 | 22.14 | 3.65E-04 | 59.52 | 1.85E-04 | 3.15E-04 |
| 6 | 0 | 0 | 27.675 | 4.06E-04 | 59.45 | 2.06E-04 | 3.49E-04 |
| 7 | 0 | 0 | 33.21 | 4.37E-04 | 59.37 | 2.22E-04 | 3.76E-04 |
| 8 | 0 | 0 | 38.745 | 4.59E-04 | 59.29 | 2.34E-04 | 3.95E-04 |
| 9 | 0 | 0 | 44.28 | 4.72E-04 | 59.2 | 2.42E-04 | 4.06E-04 |
| 10 | 0 | 0 | 49.815 | 4.77E-04 | 59.11 | 2.45E-04 | 4.1E-04 |
| 11 | 0 | 0 | 55.35 | 4.74E-04 | 59.02 | 2.44E-04 | 4.07E-04 |
| 12 | 0 | 0 | 60.885 | 4.63E-04 | 58.92 | 2.39E-04 | 3.96E-04 |
| 13 | 0 | 0 | 66.42 | 4.43E-04 | 58.81 | 2.29E-04 | 3.79E-04 |
| 14 | 0 | 0 | 71.955 | 4.16E-04 | 58.7 | 2.16E-04 | 3.55E-04 |
| 15 | 0 | 0 | 77.49 | 3.81E-04 | 58.58 | 1.99E-04 | 3.25E-04 |
| 16 | 0 | 0 | 83.025 | 3.39E-04 | 58.46 | 1.77E-04 | 2.89E-04 |
| 17 | 0 | 0 | 88.56 | 2.89E-04 | 58.33 | 1.52E-04 | 2.46E-04 |
| 18 | 0 | 0 | 94.095 | 2.32E-04 | 58.2 | 1.22E-04 | 1.98E-04 |
| 19 | 0 | 0 | 99.63 | 1.68E-04 | 58.05 | 8.9E-05 | 1.43E-04 |
| 20 | 0 | 0 | 105.165 | 9.54E-05 | 57.9 | 5.07E-05 | 8.08E-05 |
| END | 0 | 0 | 110.7 | 0 | 0 | 0 | 0 |
| GND | -104.924 | -167.914 | 0 | 4.38E-03 | -54.93 | 2.52E-03 | -3.59E-03 |
| 22 | -104.924 | -167.914 | 5.475 | 4.74E-03 | -58.02 | 2.51E-03 | -4.02E-03 |
| 23 | -104.924 | -167.914 | 10.95 | 4.95E-03 | -59.8 | 2.49E-03 | -4.27E-03 |
| 24 | -104.924 | -167.914 | 16.425 | 5.08E-03 | -61.17 | 2.45E-03 | -4.45E-03 |
| 25 | -104.924 | -167.914 | 21.9 | 5.15E-03 | -62.29 | 2.4E-03 | -4.56E-03 |
| 26 | -104.924 | -167.914 | 27.375 | 5.17E-03 | -63.25 | 2.33E-03 | -4.62E-03 |
| 27 | -104.924 | -167.914 | 32.85 | 5.14E-03 | -64.09 | 2.24E-03 | -4.62E-03 |
| 28 | -104.924 | -167.914 | 38.325 | 5.05E-03 | -64.83 | 2.15E-03 | -4.57E-03 |
| 29 | -104.924 | -167.914 | 43.8 | 4.92E-03 | -65.5 | 2.04E-03 | -4.47E-03 |
| 30 | -104.924 | -167.914 | 49.275 | 4.74E-03 | -66.1 | 1.92E-03 | -4.33E-03 |
| 31 | -104.924 | -167.914 | 54.75 | 4.51E-03 | -66.66 | 1.79E-03 | -4.14E-03 |
| 32 | -104.924 | -167.914 | 60.225 | 4.24E-03 | -67.17 | 1.64E-03 | -3.9E-03 |
| 33 | -104.924 | -167.914 | 65.7 | 3.92E-03 | -67.65 | 1.49E-03 | -3.63E-03 |
| 34 | -104.924 | -167.914 | 71.175 | 3.57E-03 | -68.1 | 1.33E-03 | -3.31E-03 |
| 35 | -104.924 | -167.914 | 76.65 | 3.18E-03 | -68.52 | 1.16E-03 | -2.96E-03 |
| 36 | -104.924 | -167.914 | 82.125 | 2.76E-03 | -68.92 | 9.91E-04 | -2.57E-03 |
| 37 | -104.924 | -167.914 | 87.6 | 2.3E-03 | -69.3 | 8.12E-04 | -2.15E-03 |
| 38 | -104.924 | -167.914 | 93.075 | 1.81E-03 | -69.67 | 6.27E-04 | -1.69E-03 |
| 39 | -104.924 | -167.914 | 98.55 | 1.28E-03 | -70.03 | 4.37E-04 | -1.2E-03 |
| 40 | -104.924 | -167.914 | 104.025 | 7.11E-04 | -70.38 | 2.39E-04 | -6.69E-04 |
| END | -104.924 | -167.914 | 109.5 | 0 | 0 | 0 | 0 |
| GND | -52.462 | -83.9568 | 0 | 3.1E-05 | 163.51 | -2.98E-05 | 8.81E-06 |
| 42 | -52.462 | -83.9568 | 4.53 | 1.3E-04 | 163.51 | -1.25E-04 | 3.69E-05 |
| 43 | -52.462 | -83.9568 | 9.06 | 1.88E-04 | 163.51 | -1.8E-04 | 5.34E-05 |
| 44 | -52.462 | -83.9568 | 13.59 | 2.34E-04 | 163.5 | -2.25E-04 | 6.65E-05 |
| 45 | -52.462 | -83.9568 | 18.12 | 2.72E-04 | 163.5 | -2.6E-04 | 7.71E-05 |
| 46 | -52.462 | -83.9568 | 22.65 | 3.01E-04 | 163.5 | -2.89E-04 | 8.56E-05 |
| 47 | -52.462 | -83.9568 | 27.18 | 3.24E-04 | 163.49 | -3.11E-04 | 9.21E-05 |

| | | | | | | | |
|---|---|---|---|---|---|---|---|
| 48 | -52.462 | -83.9568 | 31.71 | 3.4E-04 | 163.49 | -3.26E-04 | 9.67E-05 |
| 49 | -52.462 | -83.9568 | 36.24 | 3.5E-04 | 163.49 | -3.36E-04 | 9.95E-05 |
| 50 | -52.462 | -83.9568 | 40.77 | 3.54E-04 | 163.49 | -3.39E-04 | 1.01E-04 |
| 51 | -52.462 | -83.9568 | 45.3 | 3.52E-04 | 163.49 | -3.37E-04 | 9.99E-05 |
| 52 | -52.462 | -83.9568 | 49.83 | 3.43E-04 | 163.49 | -3.29E-04 | 9.76E-05 |
| 53 | -52.462 | -83.9568 | 54.36 | 3.29E-04 | 163.49 | -3.16E-04 | 9.35E-05 |
| 54 | -52.462 | -83.9568 | 58.89 | 3.09E-04 | 163.49 | -2.97E-04 | 8.79E-05 |
| 55 | -52.462 | -83.9568 | 63.42 | 2.84E-04 | 163.5 | -2.72E-04 | 8.07E-05 |
| 56 | -52.462 | -83.9568 | 67.95 | 2.53E-04 | 163.5 | -2.43E-04 | 7.2E-05 |
| 57 | -52.462 | -83.9568 | 72.48 | 2.17E-04 | 163.51 | -2.08E-04 | 6.17E-05 |
| 58 | -52.462 | -83.9568 | 77.01 | 1.76E-04 | 163.51 | -1.68E-04 | 4.98E-05 |
| 59 | -52.462 | -83.9568 | 81.54 | 1.28E-04 | 163.52 | -1.23E-04 | 3.63E-05 |
| 60 | -52.462 | -83.9568 | 86.07 | 7.35E-05 | 163.53 | -7.05E-05 | 2.08E-05 |
| END | -52.462 | -83.9568 | 90.6 | 0 | 0 | 0 | 0 |

# M&M Broadcasters, LTD
# KCLE (AM) 1460 kHz
# Facility ID 59263
# Burleson, Texas

## KCLE Tower Three Self Impedance

GEOMETRY
Wire coordinates in degrees; other dimensions in meters
Environment: perfect ground

| wire | caps | Radius | Angle | Z | radius | segs |
|---|---|---|---|---|---|---|
| 1 | none | 0 | 0 | 0 | .2231 | 20 |
| | | 0 | 0 | 110.7 | | |
| 2 | none | 198. | 238. | 0 | .2231 | 20 |
| | | 198. | 238. | 109.5 | | |
| 3 | none | 99. | 238. | 0 | .2231 | 20 |
| | | 99. | 238. | 90.6 | | |

Number of wires = 3
current nodes = 60

| | minimum | | maximum | |
|---|---|---|---|---|
| Individual wires | wire | value | wire | value |
| segment length | 1 | 5.535 | 3 | 4.53 |
| radius | 1 | .2231 | 1 | .2231 |

ELECTRICAL DESCRIPTION
Frequencies ( MHz)

| no. | frequency lowest | step | no. of steps | segment length (wavelengths) minimum | maximum |
|---|---|---|---|---|---|
| 1 | 1.46 | 0 | 1 | .0125833 | .015375 |

Sources

| source | node | sector | magnitude | phase | type |
|---|---|---|---|---|---|
| 1 | 41 | 1 | 1. | 0 | voltage |

Lumped loads

| load | node | resistance (ohms) | reactance (ohms) | inductance (mH) | capacitance (uF) | passive circuit |
|---|---|---|---|---|---|---|
| 1 | 1 | 0 | -3,633.7 | 0 | 0 | 0 |
| 2 | 21 | 0 | -5,450. | 0 | 0 | 0 |
| 3 | 41 | 0 | 0 | 0 | 0 | 0 |

IMPEDANCE
normalization = 50.

| freq (MHz) | resist (ohms) | react (ohms) | imped (ohms) | phase (deg) | VSWR dB | S11 dB | S12 dB |
|---|---|---|---|---|---|---|---|
| source = 1; node 41, sector 1 | | | | | | | |
| 1.46 | 37.287 | 25.354 | 45.091 | 34.21 | 1.9071 | -10.116 | -3.2487 |

CURRENT rms
Frequency = 1.46 MHz

Input power = .00916965 watts
Efficiency = 100. %

| current no. | X | Y | Z | mag (amps) | phase (deg) | real (amps) | imaginary (amps) |
|---|---|---|---|---|---|---|---|
| GND | 0 | 0 | 0 | 1.77E-04 | -177.82 | -1.77E-04 | -6.73E-06 |
| 2 | 0 | 0 | 5.535 | 6.E-04 | -177.81 | -6.E-04 | -2.3E-05 |
| 3 | 0 | 0 | 11.07 | 8.57E-04 | -177.77 | -8.57E-04 | -3.33E-05 |
| 4 | 0 | 0 | 16.605 | 1.06E-03 | -177.73 | -1.06E-03 | -4.21E-05 |
| 5 | 0 | 0 | 22.14 | 1.23E-03 | -177.69 | -1.23E-03 | -4.96E-05 |
| 6 | 0 | 0 | 27.675 | 1.36E-03 | -177.64 | -1.36E-03 | -5.62E-05 |
| 7 | 0 | 0 | 33.21 | 1.46E-03 | -177.58 | -1.46E-03 | -6.17E-05 |
| 8 | 0 | 0 | 38.745 | 1.53E-03 | -177.53 | -1.53E-03 | -6.62E-05 |
| 9 | 0 | 0 | 44.28 | 1.57E-03 | -177.47 | -1.57E-03 | -6.96E-05 |
| 10 | 0 | 0 | 49.815 | 1.59E-03 | -177.41 | -1.59E-03 | -7.18E-05 |
| 11 | 0 | 0 | 55.35 | 1.57E-03 | -177.34 | -1.57E-03 | -7.28E-05 |
| 12 | 0 | 0 | 60.885 | 1.53E-03 | -177.28 | -1.53E-03 | -7.24E-05 |
| 13 | 0 | 0 | 66.42 | 1.46E-03 | -177.22 | -1.46E-03 | -7.07E-05 |
| 14 | 0 | 0 | 71.955 | 1.36E-03 | -177.16 | -1.36E-03 | -6.76E-05 |
| 15 | 0 | 0 | 77.49 | 1.25E-03 | -177.1 | -1.24E-03 | -6.3E-05 |
| 16 | 0 | 0 | 83.025 | 1.1E-03 | -177.05 | -1.1E-03 | -5.68E-05 |
| 17 | 0 | 0 | 88.56 | 9.39E-04 | -177. | -9.38E-04 | -4.92E-05 |
| 18 | 0 | 0 | 94.095 | 7.52E-04 | -176.95 | -7.51E-04 | -4.E-05 |
| 19 | 0 | 0 | 99.63 | 5.43E-04 | -176.91 | -5.42E-04 | -2.92E-05 |
| 20 | 0 | 0 | 105.165 | 3.07E-04 | -176.88 | -3.06E-04 | -1.67E-05 |
| END | 0 | 0 | 110.7 | 0 | 0 | 0 | 0 |
| GND | -104.924 | -167.914 | 0 | 1.13E-04 | -176.45 | -1.13E-04 | -7.03E-06 |
| 22 | -104.924 | -167.914 | 5.475 | 5.16E-04 | -176.43 | -5.15E-04 | -3.22E-05 |
| 23 | -104.924 | -167.914 | 10.95 | 7.61E-04 | -176.39 | -7.6E-04 | -4.8E-05 |
| 24 | -104.924 | -167.914 | 16.425 | 9.58E-04 | -176.34 | -9.56E-04 | -6.11E-05 |
| 25 | -104.924 | -167.914 | 21.9 | 1.12E-03 | -176.29 | -1.12E-03 | -7.23E-05 |
| 26 | -104.924 | -167.914 | 27.375 | 1.24E-03 | -176.24 | -1.24E-03 | -8.17E-05 |
| 27 | -104.924 | -167.914 | 32.85 | 1.34E-03 | -176.18 | -1.34E-03 | -8.95E-05 |
| 28 | -104.924 | -167.914 | 38.325 | 1.41E-03 | -176.11 | -1.41E-03 | -9.56E-05 |
| 29 | -104.924 | -167.914 | 43.8 | 1.45E-03 | -176.05 | -1.45E-03 | -1.E-04 |
| 30 | -104.924 | -167.914 | 49.275 | 1.47E-03 | -175.98 | -1.46E-03 | -1.03E-04 |
| 31 | -104.924 | -167.914 | 54.75 | 1.45E-03 | -175.91 | -1.45E-03 | -1.04E-04 |
| 32 | -104.924 | -167.914 | 60.225 | 1.42E-03 | -175.84 | -1.41E-03 | -1.03E-04 |
| 33 | -104.924 | -167.914 | 65.7 | 1.35E-03 | -175.77 | -1.35E-03 | -9.98E-05 |
| 34 | -104.924 | -167.914 | 71.175 | 1.27E-03 | -175.71 | -1.26E-03 | -9.49E-05 |
| 35 | -104.924 | -167.914 | 76.65 | 1.16E-03 | -175.64 | -1.16E-03 | -8.81E-05 |
| 36 | -104.924 | -167.914 | 82.125 | 1.03E-03 | -175.58 | -1.03E-03 | -7.93E-05 |
| 37 | -104.924 | -167.914 | 87.6 | 8.76E-04 | -175.52 | -8.73E-04 | -6.84E-05 |
| 38 | -104.924 | -167.914 | 93.075 | 7.03E-04 | -175.47 | -7.E-04 | -5.55E-05 |
| 39 | -104.924 | -167.914 | 98.55 | 5.07E-04 | -175.42 | -5.06E-04 | -4.05E-05 |
| 40 | -104.924 | -167.914 | 104.025 | 2.87E-04 | -175.38 | -2.86E-04 | -2.31E-05 |
| END | -104.924 | -167.914 | 109.5 | 0 | 0 | 0 | 0 |
| GND | -52.462 | -83.9568 | 0 | .0156818 | -34.21 | .0129678 | -8.82E-03 |
| 42 | -52.462 | -83.9568 | 4.53 | .0158646 | -35.4 | .0129313 | -9.19E-03 |
| 43 | -52.462 | -83.9568 | 9.06 | .0158761 | -36.14 | .0128219 | -9.36E-03 |
| 44 | -52.462 | -83.9568 | 13.59 | .0157728 | -36.74 | .0126401 | -9.43E-03 |
| 45 | -52.462 | -83.9568 | 18.12 | .0155631 | -37.26 | .0123869 | -9.42E-03 |
| 46 | -52.462 | -83.9568 | 22.65 | .0152512 | -37.72 | .0120635 | -9.33E-03 |
| 47 | -52.462 | -83.9568 | 27.18 | .0148403 | -38.14 | .0116717 | -9.17E-03 |
| 48 | -52.462 | -83.9568 | 31.71 | .0143335 | -38.53 | .0112134 | -8.93E-03 |
| 49 | -52.462 | -83.9568 | 36.24 | .0137337 | -38.88 | .0106907 | -8.62E-03 |
| 50 | -52.462 | -83.9568 | 40.77 | .0130442 | -39.21 | .0101064 | -8.25E-03 |
| 51 | -52.462 | -83.9568 | 45.3 | .0122683 | -39.53 | 9.46E-03 | -7.81E-03 |

| | | | | | | | |
|---|---|---|---|---|---|---|---|
| 52 | -52.462 | -83.9568 | 49.83 | .0114098 | -39.82 | 8.76E-03 | -7.31E-03 |
| 53 | -52.462 | -83.9568 | 54.36 | .0104725 | -40.1 | 8.01E-03 | -6.75E-03 |
| 54 | -52.462 | -83.9568 | 58.89 | 9.46E-03 | -40.37 | 7.21E-03 | -6.13E-03 |
| 55 | -52.462 | -83.9568 | 63.42 | 8.38E-03 | -40.62 | 6.36E-03 | -5.45E-03 |
| 56 | -52.462 | -83.9568 | 67.95 | 7.22E-03 | -40.86 | 5.46E-03 | -4.73E-03 |
| 57 | -52.462 | -83.9568 | 72.48 | 6.E-03 | -41.1 | 4.52E-03 | -3.95E-03 |
| 58 | -52.462 | -83.9568 | 77.01 | 4.71E-03 | -41.33 | 3.54E-03 | -3.11E-03 |
| 59 | -52.462 | -83.9568 | 81.54 | 3.34E-03 | -41.56 | 2.5E-03 | -2.22E-03 |
| 60 | -52.462 | -83.9568 | 86.07 | 1.87E-03 | -41.78 | 1.39E-03 | -1.24E-03 |
| END | -52.462 | -83.9568 | 90.6 | 0 | 0 | 0 | 0 |

# M&M Broadcasters, LTD
# KCLE (AM) 1460 kHz
# Facility ID 59263
# Burleson, Texas

## KCLE Day Geometry

GEOMETRY

Wire coordinates in degrees; other dimensions in meters
Environment: perfect ground

| wire | caps | Radius | Angle | Z | radius | segs |
|---|---|---|---|---|---|---|
| 1 | none | 0 | 0 | 0 | .2231 | 20 |
| | | 0 | 0 | 110.7 | | |
| 2 | none | 198. | 238. | 0 | .2231 | 20 |
| | | 198. | 238. | 109.5 | | |
| 3 | none | 99. | 238. | 0 | .2231 | 20 |
| | | 99. | 238. | 90.6 | | |

Number of wires = 3
current nodes = 60

| | minimum | | maximum | |
|---|---|---|---|---|
| Individual wires | wire | value | wire | value |
| segment length | 3 | 4.53 | 1 | 5.535 |
| radius | 1 | .2231 | 1 | .2231 |

ELECTRICAL DESCRIPTION
Frequencies (MHz)

| | frequency | | no. of | segment length (wavelengths) | |
|---|---|---|---|---|---|
| no. | lowest | step | steps | minimum | maximum |
| 1 | 1.46 | 0 | 1 | .0125833 | .015375 |

Sources

| source | node | sector | magnitude | phase | type |
|---|---|---|---|---|---|
| 1 | 1 | 1 | 601.042 | 123.1 | voltage |
| 2 | 21 | 1 | 633.723 | 291.8 | voltage |
| 3 | 41 | 1 | 1,250.02 | 34.6 | voltage |

IMPEDANCE
normalization = 50.

| freq (MHz) | resist (ohms) | react (ohms) | imped (ohms) | phase (deg) | VSWR | S11 dB | S12 dB |
|---|---|---|---|---|---|---|---|
| source = 1; node 1, sector 1 | | | | | | | |
| 1.46 | 46.164 | 55.497 | 72.187 | 50.2 | 3.0083 | -6.0027 | -1.2554 |
| source = 2; node 21, sector 1 | | | | | | | |
| 1.46 | -225.67 | -108.03 | 250.19 | 205.6 | **** | **** | **** |
| source = 3; node 41, sector 1 | | | | | | | |
| 1.46 | 60.269 | 31.918 | 68.199 | 27.9 | 1.8252 | -10.69 | -.38726 |

CURRENT rms
Frequency = 1.46 MHz
Input power = 11,000. watts
Efficiency = 100. %
coordinates in degrees

| current no. | X | Y | Z | mag (amps) | phase (deg) | real (amps) | imaginary (amps) |
|---|---|---|---|---|---|---|---|
| GND | 0 | 0 | 0 | 5.88747 | 72.9 | 1.73402 | 5.62632 |
| 2 | 0 | 0 | 5.535 | 6.08674 | 71.2 | 1.96292 | 5.76154 |
| 3 | 0 | 0 | 11.07 | 6.1687 | 70.2 | 2.09155 | 5.8033 |
| 4 | 0 | 0 | 16.605 | 6.19063 | 69.4 | 2.18289 | 5.79301 |
| 5 | 0 | 0 | 22.14 | 6.15887 | 68.6 | 2.24372 | 5.73563 |
| 6 | 0 | 0 | 27.675 | 6.07655 | 68. | 2.27692 | 5.63383 |
| 7 | 0 | 0 | 33.21 | 5.94569 | 67.4 | 2.28395 | 5.48952 |
| 8 | 0 | 0 | 38.745 | 5.76808 | 66.9 | 2.26572 | 5.30445 |
| 9 | 0 | 0 | 44.28 | 5.54547 | 66.4 | 2.22292 | 5.08044 |
| 10 | 0 | 0 | 49.815 | 5.27982 | 65.9 | 2.15626 | 4.81944 |
| 11 | 0 | 0 | 55.35 | 4.9732 | 65.4 | 2.06643 | 4.52355 |
| 12 | 0 | 0 | 60.885 | 4.62788 | 65. | 1.9542 | 4.19504 |
| 13 | 0 | 0 | 66.42 | 4.24628 | 64.6 | 1.82042 | 3.83627 |
| 14 | 0 | 0 | 71.955 | 3.83091 | 64.2 | 1.66598 | 3.44969 |
| 15 | 0 | 0 | 77.49 | 3.3843 | 63.8 | 1.49182 | 3.03776 |
| 16 | 0 | 0 | 83.025 | 2.90881 | 63.5 | 1.29885 | 2.60272 |
| 17 | 0 | 0 | 88.56 | 2.40636 | 63.1 | 1.08781 | 2.14646 |
| 18 | 0 | 0 | 94.095 | 1.87781 | 62.8 | .85895 | 1.66985 |
| 19 | 0 | 0 | 99.63 | 1.32134 | 62.4 | .611324 | 1.17142 |
| 20 | 0 | 0 | 105.165 | .728318 | 62.1 | .340737 | .643696 |
| END | 0 | 0 | 110.7 | 0 | 0 | 0 | 0 |
| GND | -104.924 | -167.914 | 0 | 1.79107 | 86.2 | .117154 | 1.78723 |
| 22 | -104.924 | -167.914 | 5.475 | 1.68023 | 95.3 | -.154537 | 1.67311 |
| 23 | -104.924 | -167.914 | 10.95 | 1.62262 | 101.4 | -.321192 | 1.59051 |
| 24 | -104.924 | -167.914 | 16.425 | 1.57755 | 106.8 | -.456261 | 1.51013 |
| 25 | -104.924 | -167.914 | 21.9 | 1.53761 | 111.7 | -.567526 | 1.42904 |
| 26 | -104.924 | -167.914 | 27.375 | 1.49849 | 116.1 | -.658227 | 1.34619 |
| 27 | -104.924 | -167.914 | 32.85 | 1.45727 | 120.1 | -.729861 | 1.26132 |
| 28 | -104.924 | -167.914 | 38.325 | 1.41171 | 123.7 | -.783268 | 1.17448 |
| 29 | -104.924 | -167.914 | 43.8 | 1.36013 | 127. | -.818998 | 1.08591 |
| 30 | -104.924 | -167.914 | 49.275 | 1.30128 | 130.1 | -.837525 | .995937 |
| 31 | -104.924 | -167.914 | 54.75 | 1.23422 | 132.8 | -.839278 | .90494 |
| 32 | -104.924 | -167.914 | 60.225 | 1.15831 | 135.4 | -.824719 | .813334 |
| 33 | -104.924 | -167.914 | 65.7 | 1.07314 | 137.8 | -.794363 | .721538 |
| 34 | -104.924 | -167.914 | 71.175 | .978494 | 139.9 | -.748719 | .629976 |
| 35 | -104.924 | -167.914 | 76.65 | .87429 | 141.9 | -.688353 | .539029 |
| 36 | -104.924 | -167.914 | 82.125 | .760498 | 143.8 | -.613775 | .44904 |
| 37 | -104.924 | -167.914 | 87.6 | .637053 | 145.6 | -.525402 | .360262 |
| 38 | -104.924 | -167.914 | 93.075 | .503647 | 147.2 | -.423381 | .27278 |
| 39 | -104.924 | -167.914 | 98.55 | .359256 | 148.8 | -.307171 | .186309 |
| 40 | -104.924 | -167.914 | 104.025 | .200935 | 150.3 | -.174468 | .0996793 |
| END | -104.924 | -167.914 | 109.5 | 0 | 0 | 0 | 0 |
| GND | -52.462 | -83.9568 | 0 | 12.9606 | 6.7 | 12.873 | 1.50436 |
| 42 | -52.462 | -83.9568 | 4.53 | 13.1748 | 4.7 | 13.131 | 1.07305 |
| 43 | -52.462 | -83.9568 | 9.06 | 13.2199 | 3.5 | 13.1951 | .809679 |
| 44 | -52.462 | -83.9568 | 13.59 | 13.1663 | 2.6 | 13.1532 | .587569 |
| 45 | -52.462 | -83.9568 | 18.12 | 13.0206 | 1.7 | 13.0146 | .394463 |
| 46 | -52.462 | -83.9568 | 22.65 | 12.7866 | 1. | 12.7846 | .224938 |
| 47 | -52.462 | -83.9568 | 27.18 | 12.4669 | .4 | 12.4666 | .076535 |

| | | | | | | | |
|---|---|---|---|---|---|---|---|
| 48 | -52.462 | -83.9568 | 31.71 | 12.0637 | 359.8 | 12.0636 | -.0519965 |
| 49 | -52.462 | -83.9568 | 36.24 | 11.5795 | 359.2 | 11.5784 | -.161329 |
| 50 | -52.462 | -83.9568 | 40.77 | 11.0168 | 358.7 | 11.014 | -.251841 |
| 51 | -52.462 | -83.9568 | 45.3 | 10.3785 | 358.2 | 10.3735 | -.323763 |
| 52 | -52.462 | -83.9568 | 49.83 | 9.66742 | 357.8 | 9.66006 | -.377253 |
| 53 | -52.462 | -83.9568 | 54.36 | 8.88665 | 357.3 | 8.87708 | -.412437 |
| 54 | -52.462 | -83.9568 | 58.89 | 8.03925 | 356.9 | 8.02777 | -.429425 |
| 55 | -52.462 | -83.9568 | 63.42 | 7.12799 | 356.6 | 7.11511 | -.428311 |
| 56 | -52.462 | -83.9568 | 67.95 | 6.15503 | 356.2 | 6.14142 | -.409142 |
| 57 | -52.462 | -83.9568 | 72.48 | 5.12145 | 355.8 | 5.10794 | -.37186 |
| 58 | -52.462 | -83.9568 | 77.01 | 4.02556 | 355.5 | 4.01312 | -.316151 |
| 59 | -52.462 | -83.9568 | 81.54 | 2.85931 | 355.2 | 2.84913 | -.24105 |
| 60 | -52.462 | -83.9568 | 86.07 | 1.59988 | 354.8 | 1.59338 | -.144047 |
| END | -52.462 | -83.9568 | 90.6 | 0 | 0 | 0 | 0 |

# M&M Broadcasters, LTD
# KCLE (AM) 1460 kHz
# Facility ID 59263
# Burleson, Texas

## KCLE Day

MEDIUM WAVE ARRAY SYNTHESIS FROM FIELD RATIOS

Frequency = 1.46 MHz

| tower | field ratio magnitude | phase (deg) |
|---|---|---|
| 1 | .578 | 67. |
| 2 | .14 | 122. |
| 3 | 1. | 0 |

VOLTAGES AND CURRENTS - rms

| source node | voltage magnitude | phase (deg) | current magnitude | phase (deg) |
|---|---|---|---|---|
| 1 | 425.001 | 123.1 | 5.88748 | 72.9 |
| 21 | 448.11 | 291.8 | 1.79106 | 86.2 |
| 41 | 883.897 | 34.6 | 12.9606 | 6.7 |

Sum of square of source currents = 411.695
Total power = 11,000. watts

TOWER ADMITTANCE MATRIX

| admittance | real (mhos) | imaginary (mhos) |
|---|---|---|
| Y(1, 1) | .00292853 | -.00388837 |
| Y(1, 2) | -.000183942 | -.000268827 |
| Y(1, 3) | .00343483 | .00264704 |
| Y(2, 1) | -.000183944 | -.000268827 |
| Y(2, 2) | .00309096 | -.00410342 |
| Y(2, 3) | .00350417 | .0027511 |
| Y(3, 1) | .00343465 | .00264744 |
| Y(3, 2) | .003504 | .0027515 |
| Y(3, 3) | .0132198 | -.00650545 |

TOWER IMPEDANCE MATRIX

| impedance | real (ohms) | imaginary (ohms) |
|---|---|---|
| Z(1, 1) | 97.7738 | 140.264 |
| Z(1, 2) | -37.2639 | -18.4907 |
| Z(1, 3) | 24.1964 | -31.4587 |
| Z(2, 1) | -37.264 | -18.4907 |
| Z(2, 2) | 93.004 | 132.397 |
| Z(2, 3) | 23.8633 | -30.4403 |
| Z(3, 1) | 24.1927 | -31.4604 |
| Z(3, 2) | 23.8598 | -30.4418 |
| Z(3, 3) | 38.0249 | 25.1436 |

# M&M Broadcasters, LTD
# KCLE (AM) 1460 kHz
# Facility ID 59263
# Burleson, Texas

## KCLE Night Geometry

GEOMETRY
Wire coordinates in degrees; other dimensions in meters
Environment: perfect ground

| wire | caps | Radius | Angle | Z | radius | segs |
|---|---|---|---|---|---|---|
| 1 | none | 0 | 0 | 0 | .2231 | 20 |
| | | 0 | 0 | 110.7 | | |
| 2 | none | 198. | 238. | 0 | .2231 | 20 |
| | | 198. | 238. | 109.5 | | |
| 3 | none | 99. | 238. | 0 | .2231 | 20 |
| | | 99. | 238. | 90.6 | | |

Number of wires = 3
current nodes = 60

| | minimum | | maximum | |
|---|---|---|---|---|
| Individual wires | wire | value | wire | value |
| segment length | 3 | 4.53 | 1 | 5.535 |
| radius | 1 | .2231 | 1 | .2231 |

ELECTRICAL DESCRIPTION
Frequencies (MHz)

| | frequency | | no. of | segment length (wavelengths) | |
|---|---|---|---|---|---|
| no. | lowest | step | steps | minimum | maximum |
| 1 | 1.46 | 0 | 1 | .0125833 | .015375 |

Sources

| source | node | sector | magnitude | phase | type |
|---|---|---|---|---|---|
| 1 | 1 | 1 | 604.041 | 68. | voltage |
| 2 | 21 | 1 | 205.491 | 49.8 | voltage |

Lumped loads

| load | node | resistance (ohms) | reactance (ohms) | inductance (mH) | capacitance (uF) | passive circuit |
|---|---|---|---|---|---|---|
| 1 | 41 | 0 | 490.9 | 0 | 0 | 0 |

C:\KCLE App\302\KCLENIGHT3DET 01-19-2011 11:44:51

IMPEDANCE
normalization = 50.

| freq (MHz) | resist (ohms) | react (ohms) | imped (ohms) | phase (deg) | VSWR | S11 dB | S12 dB |
|---|---|---|---|---|---|---|---|
| source = 1; node 1, sector 1 | | | | | | | |
| 1.46 | 79.028 | 135.4 | 156.78 | 59.7 | 6.7038 | -2.6108 | -3.4503 |
| source = 2; node 21, sector 1 | | | | | | | |
| 1.46 | 48.204 | 81.264 | 94.485 | 59.3 | 4.52 | -3.9079 | -2.2668 |

CURRENT rms
Frequency = 1.46 MHz
Input power = 700. watts
Efficiency = 100. %
coordinates in degrees

| current no. | X | Y | Z | mag (amps) | phase (deg) | real (amps) | imaginary (amps) |
|---|---|---|---|---|---|---|---|
| GND | 0 | 0 | 0 | 2.72328 | 8.3 | 2.69473 | .393286 |
| 2 | 0 | 0 | 5.535 | 2.96055 | 5.6 | 2.94659 | .287119 |
| 3 | 0 | 0 | 11.07 | 3.08921 | 4.1 | 3.08144 | .219024 |
| 4 | 0 | 0 | 16.605 | 3.17351 | 2.9 | 3.16943 | .160808 |
| 5 | 0 | 0 | 22.14 | 3.22013 | 1.9 | 3.21826 | .109536 |
| 6 | 0 | 0 | 27.675 | 3.23202 | 1.1 | 3.23139 | .0640496 |
| 7 | 0 | 0 | 33.21 | 3.21079 | .4 | 3.2107 | .0238868 |
| 8 | 0 | 0 | 38.745 | 3.15757 | 359.8 | 3.15756 | -.0111404 |
| 9 | 0 | 0 | 44.28 | 3.07342 | 359.2 | 3.07315 | -.0410963 |
| 10 | 0 | 0 | 49.815 | 2.95938 | 358.7 | 2.95864 | -.065992 |
| 11 | 0 | 0 | 55.35 | 2.81661 | 358.3 | 2.81531 | -.0858205 |
| 12 | 0 | 0 | 60.885 | 2.64639 | 357.8 | 2.64448 | -.100575 |
| 13 | 0 | 0 | 66.42 | 2.45005 | 357.4 | 2.44757 | -.110262 |
| 14 | 0 | 0 | 71.955 | 2.22906 | 357. | 2.2261 | -.1149 |
| 15 | 0 | 0 | 77.49 | 1.98486 | 356.7 | 1.98156 | -.114525 |
| 16 | 0 | 0 | 83.025 | 1.71886 | 356.4 | 1.71539 | -.109179 |
| 17 | 0 | 0 | 88.56 | 1.43218 | 356. | 1.42876 | -.0988959 |
| 18 | 0 | 0 | 94.095 | 1.12531 | 355.7 | 1.12219 | -.0836668 |
| 19 | 0 | 0 | 99.63 | .797118 | 355.4 | .794598 | -.0633378 |
| 20 | 0 | 0 | 105.165 | .442258 | 355.2 | .440677 | -.0373632 |
| END | 0 | 0 | 110.7 | 0 | 0 | 0 | 0 |
| GND | -104.924 | -167.914 | 0 | 1.53722 | 350.5 | 1.51625 | -.253088 |
| 22 | -104.924 | -167.914 | 5.475 | 1.61479 | 348.8 | 1.58408 | -.313417 |
| 23 | -104.924 | -167.914 | 10.95 | 1.65174 | 347.8 | 1.61457 | -.348422 |
| 24 | -104.924 | -167.914 | 16.425 | 1.66998 | 347. | 1.62741 | -.374654 |
| 25 | -104.924 | -167.914 | 21.9 | 1.6719 | 346.4 | 1.62484 | -.393893 |
| 26 | -104.924 | -167.914 | 27.375 | 1.65862 | 345.8 | 1.60793 | -.406904 |
| 27 | -104.924 | -167.914 | 32.85 | 1.63081 | 345.3 | 1.57736 | -.414073 |
| 28 | -104.924 | -167.914 | 38.325 | 1.58901 | 344.8 | 1.53369 | -.415642 |
| 29 | -104.924 | -167.914 | 43.8 | 1.53376 | 344.4 | 1.47744 | -.411805 |
| 30 | -104.924 | -167.914 | 49.275 | 1.46561 | 344.1 | 1.40918 | -.402739 |
| 31 | -104.924 | -167.914 | 54.75 | 1.38513 | 343.7 | 1.32949 | -.388624 |
| 32 | -104.924 | -167.914 | 60.225 | 1.29298 | 343.4 | 1.23901 | -.369657 |
| 33 | -104.924 | -167.914 | 65.7 | 1.18985 | 343.1 | 1.13842 | -.346045 |
| 34 | -104.924 | -167.914 | 71.175 | 1.07643 | 342.8 | 1.02839 | -.31801 |
| 35 | -104.924 | -167.914 | 76.65 | .953455 | 342.6 | .909619 | -.285779 |
| 36 | -104.924 | -167.914 | 82.125 | .821582 | 342.3 | .782759 | -.24957 |
| 37 | -104.924 | -167.914 | 87.6 | .681348 | 342.1 | .648319 | -.209566 |
| 38 | -104.924 | -167.914 | 93.075 | .53299 | 341.9 | .506528 | -.165856 |
| 39 | -104.924 | -167.914 | 98.55 | .375971 | 341.7 | .356879 | -.118285 |
| 40 | -104.924 | -167.914 | 104.025 | .207797 | 341.5 | .197014 | -.0660671 |
| END | -104.924 | -167.914 | 109.5 | 0 | 0 | 0 | 0 |
| GND | -52.462 | -83.9568 | 0 | .32043 | 44. | .230583 | .222502 |
| 42 | -52.462 | -83.9568 | 4.53 | .227246 | 44. | .163524 | .157799 |
| 43 | -52.462 | -83.9568 | 9.06 | .170414 | 44. | .122619 | .118345 |
| 44 | -52.462 | -83.9568 | 13.59 | .12256 | 44. | .0881699 | .0851299 |
| 45 | -52.462 | -83.9568 | 18.12 | .0810311 | 44. | .0582689 | .0563096 |
| 46 | -52.462 | -83.9568 | 22.65 | .0446505 | 44.1 | .0320713 | .0310661 |
| 47 | -52.462 | -83.9568 | 27.18 | .0128828 | 44.5 | 9.19E-03 | 9.02E-03 |
| 48 | -52.462 | -83.9568 | 31.71 | .0145501 | 223.5 | -.0105614 | -.0100081 |

| | | | | | | | |
|---|---|---|---|---|---|---|---|
| 49 | -52.462 | -83.9568 | 36.24 | .0377975 | 223.8 | -.0273009 | -.0261403 |
| 50 | -52.462 | -83.9568 | 40.77 | .0569515 | 223.8 | -.0410887 | -.0394359 |
| 51 | -52.462 | -83.9568 | 45.3 | .0720711 | 223.9 | -.0519665 | -.0499373 |
| 52 | -52.462 | -83.9568 | 49.83 | .0832014 | 223.9 | -.0599664 | -.0576759 |
| 53 | -52.462 | -83.9568 | 54.36 | .0903815 | 223.9 | -.0651171 | -.0626785 |
| 54 | -52.462 | -83.9568 | 58.89 | .0936485 | 223.9 | -.0674464 | -.0649694 |
| 55 | -52.462 | -83.9568 | 63.42 | .0930366 | 224. | -.0669811 | -.0645704 |
| 56 | -52.462 | -83.9568 | 67.95 | .0885718 | 224. | -.0637426 | -.0614967 |
| 57 | -52.462 | -83.9568 | 72.48 | .0802579 | 224. | -.0577369 | -.0557475 |
| 58 | -52.462 | -83.9568 | 77.01 | .068045 | 224. | -.0489317 | -.0472843 |
| 59 | -52.462 | -83.9568 | 81.54 | .0517456 | 224. | -.037196 | -.0359732 |
| 60 | -52.462 | -83.9568 | 86.07 | .0308436 | 224.1 | -.0221624 | -.0214512 |
| END | -52.462 | -83.9568 | 90.6 | 0 | 0 | 0 | 0 |

**M&M Broadcasters, LTD**
**KCLE (AM) 1460 kHz**
**Facility ID 59263**
**Burleson, Texas**

## KCLE Night Array Synthesis

MEDIUMIUM WAVE ARRAY SYNTHESIS FROM FIELD RATIOS

Frequency = 1.46 MHz

| tower | field ratio magnitude | phase (deg) |
|---|---|---|
| 1 | 1. | 0 |
| 2 | .5 | -15. |

VOLTAGES AND CURRENTS - rms

| source node | voltage magnitude | phase (deg) | current magnitude | phase (deg) |
|---|---|---|---|---|
| 1 | 426.843 | 68. | 2.72309 | 8.3 |
| 21 | 145.488 | 49.9 | 1.53857 | 350.5 |

Sum of square of source currents = 19.5648
Total power = 700. watts

TOWER ADMITTANCE MATRIX

| admittance | real (mhos) | imaginary (mhos) |
|---|---|---|
| Y(1, 1) | .00330001 | -.00502392 |
| Y(1, 2) | .000208176 | -.00143196 |
| Y(2, 1) | .00020818 | -.00143196 |
| Y(2, 2) | .00350453 | -.00529468 |

TOWER IMPEDANCE MATRIX

| impedance | real (ohms) | imaginary (ohms) |
|---|---|---|
| Z(1, 1) | 100.765 | 139.701 |
| Z(1, 2) | -34.3437 | -19.0126 |
| Z(2, 1) | -34.3438 | -19.0125 |
| Z(2, 2) | 95.855 | 131.915 |

**M&M Broadcasters, LTD**
**KCLE (AM) 1460 kHz**
**Facility ID 59263**
**Burleson, Texas**

## KCLE Day Tower Base Correction Calculations

Tower 1
Tower feed inductance was measured as +j38 or 4.14uH

| branch | label | nodes | | value | function | tolerance | condition |
|---|---|---|---|---|---|---|---|
| 1 | V1 | 0 | 0 | 100. | | | |
| 2 | R1 | 1 | 0 | 100.K | | | |
| 3 | R2 | 1 | 2 | 0.1 | | | |
| 4 | C1 | 2 | 0 | 13.46p | | | |
| 5 | L1 | 2 | 3 | 4.14u | | | |
| 6 | C2 | 3 | 0 | 30.p | | | |
| 7 | R3 | 3 | 0 | 46.164 | J 55.497 | | |

-->ac 1.46m

| freq | probe | value | dB | phase | phase delay |
|---|---|---|---|---|---|
| 1.46M | V:1 | 0.106339 | -19.466 | 62.632 | -119.163n |
| 1.46M | V:2 | 0.106293 | -19.470 | 62.680 | -119.255n |
| 1.46M | V:3 | 0.0741217 | -22.601 | 49.111 | -93.4387n |
| 1.46M | I:R2 | 999.512u | -60.004 | -0.054 | 102.996p |
| 1.46M | I:R3 | 0.00102679 | -59.770 | -1.134 | 2.1575n |

**Base - Feed Correction Ratio = R2/R3 = .969 Phase = + 1.08°**

Tower 2
Tower feed inductance was measured at +j49.6 or 5.41uH
Negative Tower Correction
First Impedance "seen" by ATU with feed was calculated using modeled value of tower impedance, R3

| branch | label | nodes | | value | function | tolerance | condition |
|---|---|---|---|---|---|---|---|
| 1 | V1 | 0 | 0 | 100. | | | |
| 2 | R1 | 1 | 0 | 100.K | | | |
| 3 | R2 | 1 | 2 | 0.1 | | | |
| 4 | C1 | 2 | 0 | 13.46p | | | |
| 5 | L1 | 2 | 3 | 5.41u | | | |
| 6 | C2 | 3 | 0 | 20.p | | | |
| 7 | R3 | 3 | 0 | 225.67 | J-108.03 | | |

| freq | probe | value | dB | phase | phase delay |
|---|---|---|---|---|---|

| | | | | | |
|---|---|---|---|---|---|
| 1.46M | V:1 | 0.223931 | -12.998 | -18.197 | 34.6223n |
| 1.46M | V:2 | 0.223836 | -13.001 | -18.205 | 34.6375n |
| 1.46M | V:3 | 0.242573 | -12.303 | -29.385 | 55.9084n |
| 1.46M | Z:R1 | 223.931 | 23.501 | -18.197 | 34.6223n |
| 1.46M | I:R2 | 997.873u | -60.018 | 0.040 | -76.3957p |
| 1.46M | I:R3 | 969.537u | -60.269 | -3.805 | 7.23872n |

Corrected from Polar Coordinates, Z:R1 = 212.732 –J69.93
For calculation of negative tower, reverse direction for current flow, using conjugate of Z:R1 = 212.732 +J69.93

| branch | label | nodes | | value | function | tolerance | condition |
|---|---|---|---|---|---|---|---|
| 1 | V1 | 0 | 0 | 100. | | | |
| 2 | R1 | 1 | 0 | 100.K | | | |
| 3 | R2 | 1 | 2 | 0.1 | | | |
| 4 | C1 | 2 | 0 | 20.p | | | |
| 5 | L1 | 2 | 3 | 5.41u | | | |
| 6 | C2 | 3 | 0 | 13.46p | | | |
| 7 | R3 | 3 | 0 | 212.732 | J 69.93 | | |

-->ac 1.46m

| freq | probe | value | dB | phase | phase delay |
|---|---|---|---|---|---|
| 1.46M | V:1 | 0.249279 | -12.066 | 25.489 | -48.4945n |
| 1.46M | V:2 | 0.249189 | -12.069 | 25.499 | -48.5133n |
| 1.46M | V:3 | 0.229937 | -12.768 | 14.296 | -27.2n |
| 1.46M | Z:R1 | 249.279 | 23.967 | 25.489 | -48.4945n |
| 1.46M | I:R2 | 997.75u | -60.020 | -0.062 | 117.202p |
| 1.46M | I:R3 | 0.00102682 | -59.770 | -3.901 | 7.42124n |

**Base-Feed Correction Ratio R3/R2 = 1.029 Phase = -3.839°**

Tower 3 Day
Tower feed inductance was measured at +j45.3 or 4.94 uH

| branch | label | nodes | | value | function | tolerance | condition |
|---|---|---|---|---|---|---|---|
| 1 | V1 | 0 | 0 | 100. | | | |
| 2 | R1 | 1 | 0 | 100.K | | | |
| 3 | R2 | 1 | 2 | 0.1 | | | |
| 4 | C1 | 2 | 0 | 13.46p | | | |
| 5 | L1 | 2 | 3 | 4.94u | | | |
| 6 | C2 | 3 | 0 | 20.p | | | |
| 7 | R3 | 3 | 0 | 60.27 | J 31.9 | | |

-->ac 1.46m

| freq | probe | value | dB | phase | phase delay |
|---|---|---|---|---|---|
| 1.46M | V:1 | 0.0989398 | -20.093 | 51.001 | -97.0346n |
| 1.46M | V:2 | 0.098877 | -20.098 | 51.046 | -97.1203n |
| 1.46M | V:3 | 0.0691996 | -23.198 | 26.775 | -50.9413n |

| | | | | | |
|---|---|---|---|---|---|
| 1.46M | I:R2 | 999.378u | -60.005 | -0.044 | 83.8725p |
| 1.46M | I:R3 | 0.00101478 | -59.873 | -1.117 | 2.12486n |

**Base - Feed Correction Ratio = R2/R3 = .9848 Phase = + 1.073°**

**M&M Broadcasters, LTD**
**KCLE (AM) 1460 kHz**
**Facility ID 59263**
**Burleson, Texas**

## KCLE NIGHT BASE CORRECTION CALCULATIONS

KCLE T1

| branch | label | nodes | | value | function | tolerance | condition |
|---|---|---|---|---|---|---|---|
| 1 | V1 | 0 | 0 | 100. | | | |
| 2 | R1 | 1 | 0 | 100.K | | | |
| 3 | R2 | 1 | 2 | 0.1 | | | |
| 4 | C1 | 2 | 0 | 13.46p | | | |
| 5 | L1 | 2 | 3 | 4.14u | | | |
| 6 | C2 | 3 | 0 | 30.p | | | |
| 7 | R3 | 3 | 0 | 79.028 | J 135.4 | | |

-->ac 1.46m

| freq | probe | value | dB | phase | phase delay |
|---|---|---|---|---|---|
| 1.46M | V:1 | 0.2004 | -13.962 | 63.507 | -120.827n |
| 1.46M | V:2 | 0.200356 | -13.964 | 63.533 | -120.876n |
| 1.46M | V:3 | 0.166275 | -15.583 | 57.716 | -109.81n |
| 1.46M | I:R2 | 999.108u | -60.008 | -0.103 | 195.691p |
| 1.46M | I:R3 | 0.00106059 | -59.489 | -2.013 | 3.83048n |

**Feed Correction R2/R3 =.942 Ratio, Phase = +1.91°**

KCLE T2 Night

| branch | label | nodes | | value | function | tolerance | condition |
|---|---|---|---|---|---|---|---|
| 1 | V1 | 0 | 0 | 100. | | | |
| 2 | R1 | 1 | 0 | 100.K | | | |
| 3 | R2 | 1 | 2 | 0.1 | | | |
| 4 | C1 | 2 | 0 | 13.46p | | | |
| 5 | L1 | 2 | 3 | 5.41u | | | |
| 6 | C2 | 3 | 0 | 20.p | | | |
| 7 | R3 | 3 | 0 | 48.2 | J 81.264 | | |

-->ac 1.46m

| freq | probe | value | dB | phase | phase delay |
|---|---|---|---|---|---|
| 1.46M | V:1 | 0.143017 | -16.892 | 68.863 | -131.019n |
| 1.46M | V:2 | 0.142981 | -16.894 | 68.901 | -131.09n |
| 1.46M | V:3 | 0.0974424 | -20.225 | 58.379 | -111.07n |
| 1.46M | I:R2 | 999.485u | -60.004 | -0.076 | 145.49p |
| 1.46M | I:R3 | 0.00103132 | -59.732 | -0.948 | 1.8036n |

**Feed Correction R2/R3 = .9691 Phase = +.872°**

KCLE Base Network

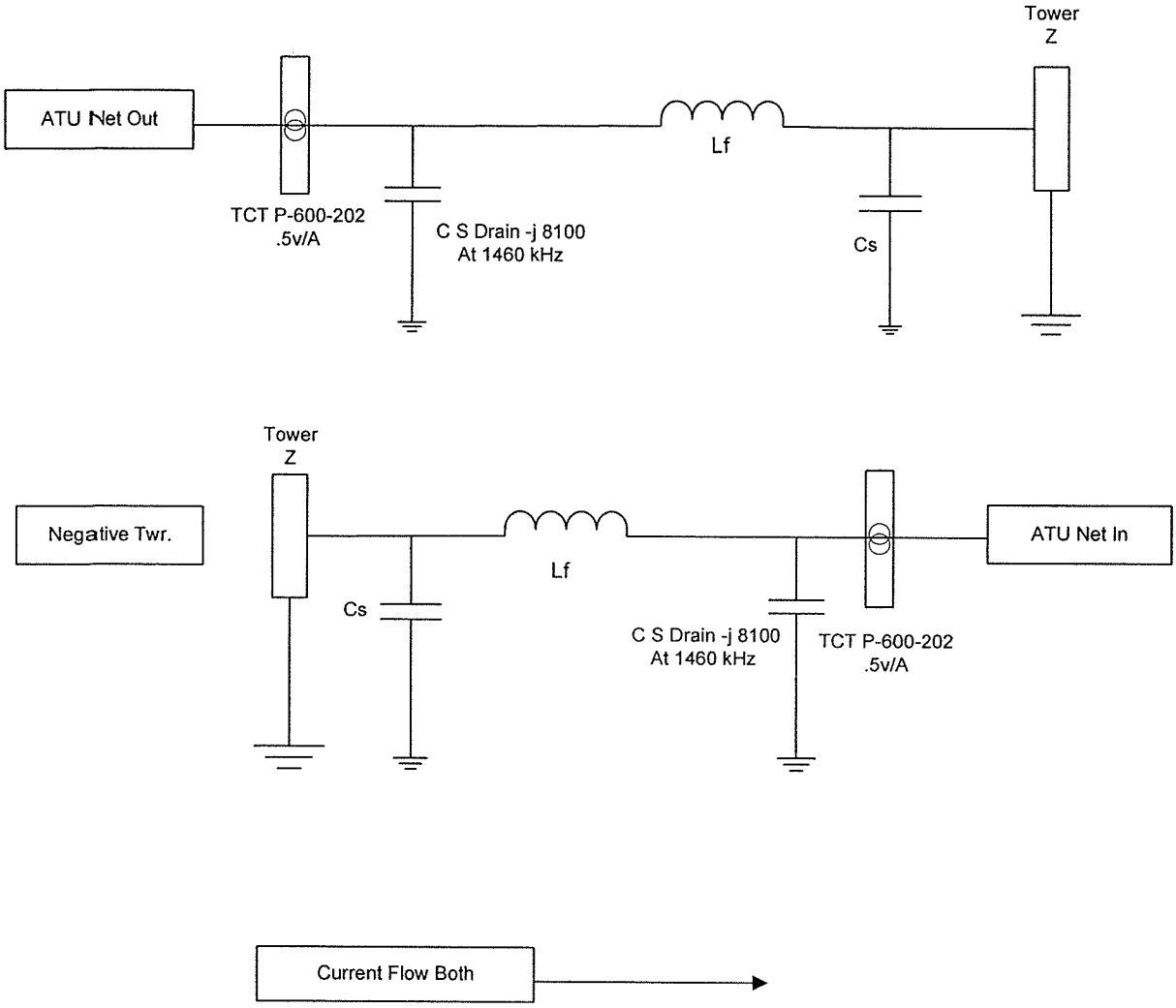

# KCLE ANTENNA MONITOR PARAMETERS

## KCLE DAY

| T1 MOM CURRENT | T1 MOM PHASE | T2 MOM CURRENT | T2 MOM PHASE | T3 MOM CURRENT | T3 MOM PHASE |
|---|---|---|---|---|---|
| 5.88747 | 72.9 | 1.79107 | 86.2 | 12.9606 | 6.7 |
| T1 Base Ratio Correction | T1 Base Ph Correction | T2 Base Ratio Correction | T2 Base Ph Correction | T3 Base Ratio Corection | T3 Base Ph Correction |
| 0.969 | 1.08 | 1.029 | -3.84 | 0.9848 | 1.073 |
| T1 Normalized Ratio | T1 Normalized Phase | T2 Normalized Ratio | T2 Normalized Phase | T3 Normalized Ratio | T3 Normalized Phase |
| 0.447 | 66.2 | 0.144 | 74.59 | 1 | 0 |

## KCLE NIGHT

| T1 MOM CURRENT | T1 MOM PHASE | T2 MOM CURRENT | T2 MOM PHASE |
|---|---|---|---|
| 2.72328 | 8.3 | 1.53722 | -9.5 |
| T1 Base Ratio Correction | T1 Base Ph Correction | T2 Base Ratio Correction | T2 Base Ph Correction |
| 0.942 | 1.91 | 0.9691 | 0.872 |
| T1 Normalized Ratio | T1 Normalized Phase | T2 Normalized Ratio | T2 Normalized Phase |
| 1 | 0 | 0.581 | -18.8 |

**M&M Broadcasters, LTD**
**KCLE (AM) 1460 kHz**
**Facility ID 59263**
**Burleson, Texas**

## KCLE Sample Antenna Monitoring System

The KCLE sampling system consists of three electrically equal length LDF 4-50 Heliax coaxial cables. The lines are connected to new Phasetek P-600-202 .5v/Amp sampling transformers. The transformers are installed in the ATU at the output to the antenna feed. At the time of the adjustment of the system, the transformers were were disconnected and measured with a common signal from a HP 8752A Network Analyzer (SN. 2901A00339). The signal was a CW signal from the reflection test port (RF Out) at 1.46 MHz. The output port of each transformer was fed to the transmission test port (RF In) of the analyzer and compared against the reference transformer for phase and magnitude.

| Tower | Magnitude | Phase (Deg) |
|---|---|---|
| 1 | 1.000 | 0 |
| 2 | .9966 | -.290 |
| 3 | .9988 | -0.35 |

The antenna monitor utilized is a Potomac Instruments AM-1900-3, serial number 506. The monitor was operated and calibrated according to the manufacturer's specifications. The accuracy of the device was verified by driving all ports with a common signal from a Potomac SD31 generator. The antenna monitor was found to be well within manufacturer's specifications.

Sample lines were measured using an Array SolutionsAIM470C Network Analyzer. The line lengths were determined using the technique described in the methodology section of this exhibit. The results of the measurements and calculations are listed below.

| | **Resonance Below 1460 Khz** | **Resonance Above 1460Khz** | **Calculated Electrical Length** | **Measured Impedance Into TCT** |
|---|---|---|---|---|
| **Tower 1** | 813.4 | 2437.90 | 161.5 | 49.55+j.07 |
| **Tower 2** | 815 | 2440.7 | 161.2 | 49.71+j.5 |
| **Tower 3** | 813.9 | 2438.9 | 161.4 | 49.57+j.35 |

| | +45 Degree Offset Frequency (KHz) | +45 Degree Measured Impedance (Ohms) | -45 Degree Offset Frequency (KHz) | -45 Degree Measured Impedance (Ohms) | Calculated Characteristic Impedance (Ohms) |
|---|---|---|---|---|---|
| **Tower 1** | 1220.1 | 2.88 +53.72 | 406.7 | .41-j49.62 | 51.67 |
| **Tower 2** | 1222.5 | 2.89+j53.75 | 407.5 | .41-j49.38 | 51.56 |
| **Tower 3** | 1220.9 | 2.92+j53.88 | 407 | .42-49.66 | 51.77 |

Maximum impedance = 51.77 ohms
Minimum impedance = 51.56 ohms

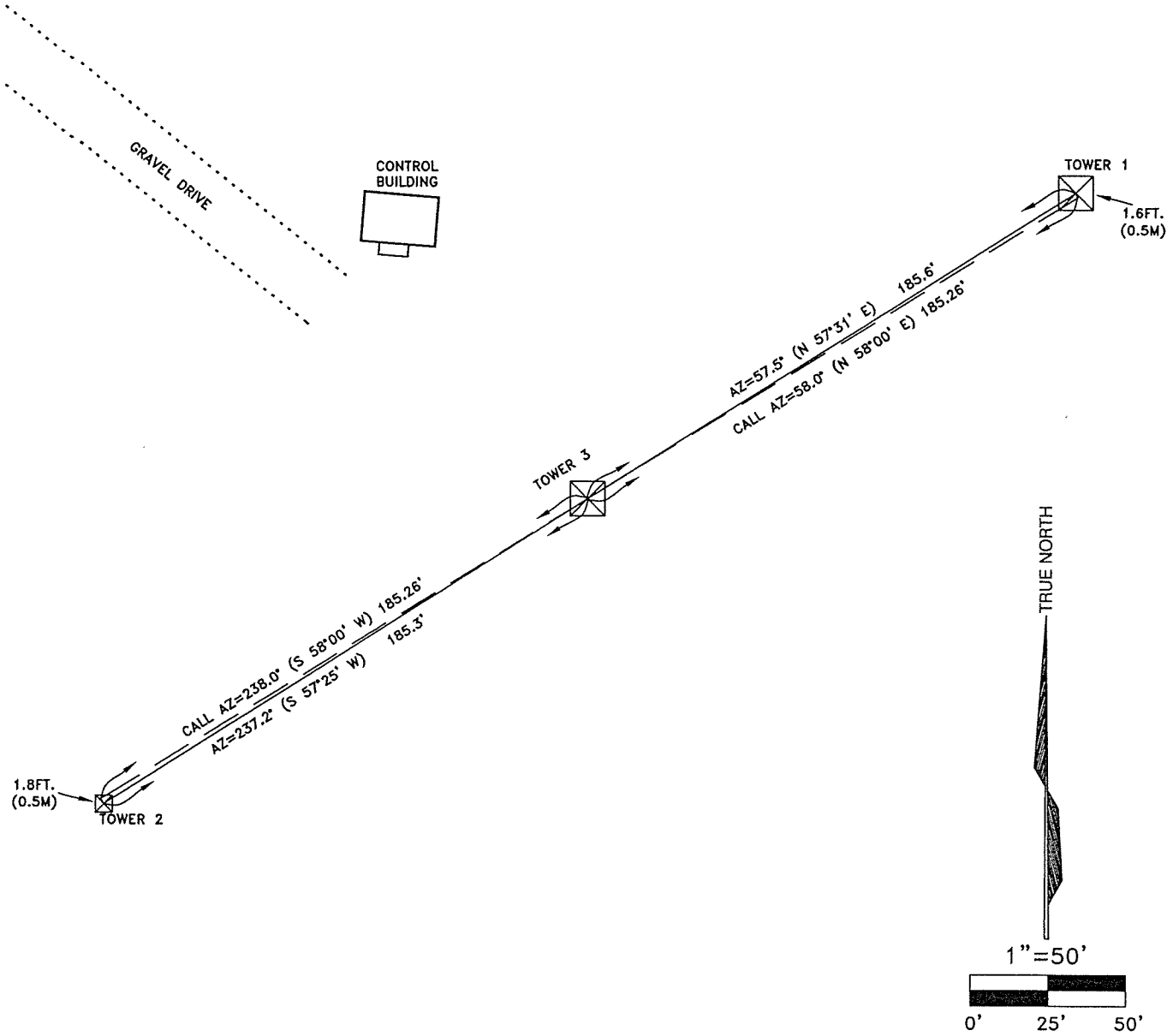


AZIMUTHS AND BEARINGS SHOWN HEREON ARE BASED ON TRUE NORTH
DISTANCES SHOWN ARE SURFACE MEASUREMENTS

# KCLE RADIO TOWER LOCATION EXHIBIT

H. LITTLE SURVEY A-930

BURLESON, TARRANT CO, TX

JN: 09-1606 DRAWN BY: MGD

DATE: 07-23-10 CHECKED BY: WMC



Coleman & Associates Land Surveying
P. O. BOX 686 · DENTON, TEXAS 76202
PH(940)565-8215,FAX (940)565-9800,
WWW.COLEMANSURVEYING.COM
© 2010 COLEMAN & ASSOC. SURVEYING

Z:\CALS RECORDS\1600-1699\09-1606 H LITTLE S/ A-930 KCLE (GARY WOSS)\EP\1606-EP.dwg, REPORT EXHIBIT #1 REVISED 07-28-10, 7/30/2010 2:38:46 PM, Marc

**KCLE 1460 kHz Reference Readings**
**Measured by: Mitch Rice using FIM 41 S.N. 497**

**Day Reference Readings**

| 58 Deg. | Distance | Reading | Time | Date | Location Description |
|---|---|---|---|---|---|
| | 3.74 | 95 | 1248 | 8/17/2010 | 32 35 46.9 97 14 48.5 Mitchell Saxon Rd |
| | 6.97 | 54 | 1302 | " | 32 36 42.7 97 13 03 4809 Nancy |
| | 9.66 | 27.5 | 1315 | " | 32 37 28.7 97 11 34.6 7424 Mansfield Cardinal |
| | 13.23 | 14 | 1326 | " | 32 38 29.74 97 09 39.2 3307 Redstone |
| **207 Deg** | 4.45 | 237 | 1213 | 8/19/2010 | 32 32 34.9 97 18 07 109 S Hurst |
| | 7.6 | 100 | 1231 | " | 32 31 03.9 97 19 02.7 CR 803 & &15 |
| | 14.17 | 35 | 1249 | " | 32 27 53.4 97 20 58 6408 CR803 |
| **238 Deg** | 3.75 | 320 | 1154 | " | 32 33 38.6 97 18 52.8 300 Boone Rd |
| | 7.04 | 175 | 1137 | " | 32 33 42.2 97 20 39.7 724 Bryan Dr |
| | 10.34 | 120 | 1123 | " | 32 31 45.3 97 22 26.9 CR 920 |
| | 13.7 | 75 | 1114 | " | 32 30 47.9 97 24 17.6 1517 CR 914 |
| **269 Deg** | 2.98 | 420 | 1021 | 8/17/2010 | 32 34 41.6 97 18 44.9 FM 1187 |
| | 6.36 | 160 | 1032 | " | 32 34 41.7 97 20 54.7 PVt Rd EMain & Thompson |
| | 9.28 | 100 | 1044 | " | 32 34 37.6 97 22 46.5 Lot Crowley Eagles field house |
| | 12.14 | 76 | 1054 | " | 32 34 36.4 97 24 36.2 CR 919 |

**Night Reference Readings**

| | | | | | |
|---|---|---|---|---|---|
| **24.5 Deg** | 3.28 | 24 | 1503 | 8/19/2010 | 32 36 19 97 15 57.7 Rendon Rd past Village Creek |
| | 10.27 | 7 | 1522 | " | 32 39 45.4 97 14 29.5 Gilman Rd |
| | 13.4 | 4.5 | 1534 | " | 32 41 17.9 97 13 16.3 7107 Lake Powell |
| **91.5 Deg** | 3.66 | 21 | 1658 | " | 32 34 39.5 97 14 29.5 12260 Rendon |
| | 7.05 | 7.3 | 1611 | " | 32 34 37.3 97 12 19.3 118 Willow Creek |
| | 13.66 | 4.5 | 1641 | " | 32 34 30.8 97 08 2.8 Pleasant Ridge Rd near church |
| **152 Deg** | 3.33 | 100 | 1145 | 8/20/2010 | 32 33 08.1 97 15 49.7 202 Hillside Dr E |
| | 6.86 | 36 | 1202 | " | 32 34 28.22 97 16 47.8 920 Pecan &CR529 |
| | 9.91 | 30 | 1222 | " | 32 29 59.3 97 13 51.41 CR523 .1 mi past 605 |
| | 12.53 | 12.5 | 1233 | " | 32 28 45.1 97 13 04.2 8952 &FM917 |
| **228 Deg** | 4.07 | 44 | 1307 | " | 32 33 14.2 97 18 46.3 across from Spinks on Stone |
| | 6.18 | 21.3 | 1436 | " | 32 32 15.8 97 20 03.7 Capt Ds on Market St |
| | 10.1 | 14.9 | 1420 | " | 32 31 02.9 97 21 38.5 CR920 |
| | 14.48 | 8.8 | 1410 | " | 32 29 28.37 97 19 06 920 1021 |
| **248 Deg** | 3.82 | 47 | 1450 | " | 32 33 56.5 97 19 06 Front of Cracker Barrel |
| | 7.69 | 18.9 | 1322 | " | 32 33 09.6 97 21 28.3 1252 Catherine |
| | 11.25 | 8.4 | 1335 | " | 32 32 26.2 97 23 31.5 2100 CR920 |