Ann

Sue 5/18/11

Federal Communications Commission
Washington, D. C. 20554

Approved by OMB
3060-0627
Expires 01/31/98

FOR FCC USE ONLY

FCC 302-AM
APPLICATION FOR AM BROADCAST STATION LICENSE

18481

(Please read instructions before filling out form.

FOR COMMISSION USE ONLY
FILE NO. BMML-20110511AHD

SECTION I - APPLICANT FEE INFORMATION

1. PAYOR NAME (Last, First, Middle Initial)

Eagle Communications. Inc.

MAILING ADDRESS (Line 1) (Maximum 35 characters)
2703 Hall Street

MAILING ADDRESS (Line 2) (Maximum 35 characters)
Suite # 15

CITY	STATE OR COUNTRY (if foreign address)	ZIP CODE
Hays	Kansas	67601 - 1987

TELEPHONE NUMBER (include area code)	CALL LETTERS	OTHER FCC IDENTIFIER (If applicable)
785 625-4000	KFEQ	Facility ID Number 34419

2. A. Is a fee submitted with this application? [✓] Yes [ ] No

B. If No, indicate reason for fee exemption (see 47 C.F.R. Section

[ ] Governmental Entity [ ] Noncommercial educational licensee [ ] Other (Please explain):

C. If Yes, provide the following information:

Enter in Column (A) the correct Fee Type Code for the service you are applying for. Fee Type Codes may be found in the "Mass Media Services Fee Filing Guide." Column (B) lists the Fee Multiple applicable for this application. Enter fee amount due in Column (C).

(A) FEE TYPE CODE	(B) FEE MULTIPLE	(C) FEE DUE FOR FEE TYPE CODE IN COLUMN (A)	FOR FCC USE ONLY
M M R	0 0 0 1	$ 615.00	

To be used only when you are requesting concurrent actions which result in a requirement to list more than one Fee Type Code.

(A)	(B)	(C)	FOR FCC USE ONLY
M O R	0 0 0 1	$ 705.00	

ADD ALL AMOUNTS SHOWN IN COLUMN C, AND ENTER THE TOTAL HERE. THIS AMOUNT SHOULD EQUAL YOUR ENCLOSED REMITTANCE.

TOTAL AMOUNT REMITTED WITH THIS APPLICATION	FOR FCC USE ONLY
$ 1320.00	

SECTION II - APPLICANT INFORMATION		
1. NAME OF APPLICANT Eagle Communications, Inc.		
MAILING ADDRESS 2703 Hall Street, Suite # 15		
CITY Hays	STATE Kansas	ZIP CODE 67601 - 1987

2. This application is for:

☑ Commercial ☐ Noncommercial

☑ AM Directional ☐ AM Non-Directional

Call letters	Community of License	Construction Permit File No.	Modification of Construction Permit File No(s).	Expiration Date of Last Construction Permit
KFEQ	St. Joseph, Missouri	Not Applicable	Not Applicable	Not Applicable

3. Is the station now operating pursuant to automatic program test authority in accordance with 47 C.F.R. Section 73.1620?

☐ Yes ☑ No

If No, explain in an Exhibit.

Exhibit No. PTA not required

4. Have all the terms, conditions, and obligations set forth in the above described construction permit been fully met?

☐ Yes ☑ No

If No, state exceptions in an Exhibit.

Exhibit No. Not Applicable

5. Apart from the changes already reported, has any cause or circumstance arisen since the grant of the underlying construction permit which would result in any statement or representation contained in the construction permit application to be now incorrect?

☐ Yes ☑ No

If Yes, explain in an Exhibit.

Exhibit No. Not Applicable

6. Has the permittee filed its Ownership Report (FCC Form 323) or ownership certification in accordance with 47 C.F.R. Section 73.3615(b)?

☑ Yes ☐ No

☐ Does not apply

If No, explain in an Exhibit.

Exhibit No. N/A

7. Has an adverse finding been made or an adverse final action been taken by any court or administrative body with respect to the applicant or parties to the application in a civil or criminal proceeding, brought under the provisions of any law relating to the following: any felony; mass media related antitrust or unfair competition; fraudulent statements to another governmental unit; or discrimination?

☐ Yes ☑ No

If the answer is Yes, attach as an Exhibit a full disclosure of the persons and matters involved, including an identification of the court or administrative body and the proceeding (by dates and file numbers), and the disposition of the litigation. Where the requisite information has been earlier disclosed in connection with another application or as required by 47 U.S.C. Section 1.65(c), the applicant need only provide: (i) an identification of that previous submission by reference to the file number in the case of an application, the call letters of the station regarding which the application or Section 1.65 information was filed, and the date of filing; and (ii) the disposition of the previously reported matter.

Exhibit No. N/A

8. Does the applicant, or any party to the application, have a petition on file to migrate to the expanded band (1605-1705 kHz) or a permit or license either in the existing band or expanded band that is held in combination (pursuant to the 5 year holding period allowed) with the AM facility proposed to be modified herein?

☐ Yes ☑ No

If Yes, provide particulars as an Exhibit.

Exhibit No. N/A

The APPLICANT hereby waives any claim to the use of any particular frequency or of the electromagnetic spectrum as against the regulatory power of the United States because use of the same, whether by license or otherwise, and requests and authorization in accordance with this application. (See Section 304 of the Communications Act of 1934, as amended).

The APPLICANT acknowledges that all the statements made in this application and attached exhibits are considered material representations and that all the exhibits are a material part hereof and are incorporated herein as set out in full in

CERTIFICATION

1. By checking Yes, the applicant certifies, that, in the case of an individual applicant, he or she is not subject to a denial of federal benefits that includes FCC benefits pursuant to Section 5301 of the Anti-Drug Abuse Act of 1988, 21 U.S.C. Section 862, or, in the case of a non-individual applicant (e.g., corporation, partnership or other unincorporated association), no party to the application is subject to a denial of federal benefits that includes FCC benefits pursuant to that section. For the definition of a "party" for these purposes, see 47 C.F.R. Section 1.2002(b).

☑ Yes ☐ No

2. I certify that the statements in this application are true, complete, and correct to the best of my knowledge and belief, and are made in good faith.

Name	Signature	
Gary D. Shorman		
Title	Date	Telephone Number
President	5/10/2011	785 625-4000

WILLFUL FALSE STATEMENTS ON THIS FORM ARE PUNISHABLE BY FINE AND/OR IMPRISONMENT (U.S. CODE, TITLE 18, SECTION 1001), AND/OR REVOCATION OF ANY STATION LICENSE OR CONSTRUCTION

FCC NOTICE TO INDIVIDUALS REQUIRED BY THE PRIVACY ACT AND THE PAPERWORK REDUCTION ACT

The solicitation of personal information requested in this application is authorized by the Communications Act of 1934, as amended. The Commission will use the information provided in this form to determine whether grant of the application is in the public interest. In reaching that determination, or for law enforcement purposes, it may become necessary to refer personal information contained in this form to another government agency. In addition, all information provided in this form will be available for public inspection. If information requested on the form is not provided, the application may be returned without action having been taken upon it or its processing may be delayed while a request is made to provide the missing information. Your response is required to obtain the requested authorization.

Public reporting burden for this collection of information is estimated to average 639 hours and 53 minutes per response, including the time for reviewing instructions, searching existing data sources, gathering and maintaining the data needed, and completing and reviewing the collection of information. Comments regarding this burden estimate or any other aspect of this collection of information, including suggestions for reducing the burden, can be sent to the Federal Communications Commission, Records Management Branch, Paperwork Reduction Project (3060-0627), Washington, D. C. 20554. Do NOT send completed forms to this address.

THE FOREGOING NOTICE IS REQUIRED BY THE PRIVACY ACT OF 1974, P.L. 93-579, DECEMBER 31, 1974, 5 U.S.C. 552a(e)(3), AND THE PAPERWORK REDUCTION ACT OF 1980, P.L. 96-511, DECEMBER 11, 1980, 44 U.S.C. 3507.

SECTION III - LICENSE APPLICATION ENGINEERING DATA

Name of Applicant
Eagle Communications, Inc.

PURPOSE OF AUTHORIZATION APPLIED FOR: (check one)

☑ Station License ☐ Direct Measurement of Power

1. Facilities authorized in construction permit

Call Sign	File No. of Construction Permit (if applicable)	Frequency (kHz)	Hours of Operation	Power in kilowatts	
				Night	Day
KFEQ	Not Applicable	680	Unlimited	5	5

2. Station location

State	City or Town
Missouri	St. Joseph

3. Transmitter location

State	County	City or Town	Street address (or other identification)
Missouri	Andrew	St. Joseph	20761 N. Belt Highway

4. Main studio location

State	County	City or Town	Street address (or other identification)
Missouri	Buchanan	St. Joseph	4101 Country Lane

5. Remote control point location (specify only if authorized directional antenna)

State	County	City or Town	Street address (or other identification)
Missouri	Buchanan	St. Joseph	4101 Country Lane

6. Has type-approved stereo generating equipment been installed? ☐ Yes ☑ No

7. Does the sampling system meet the requirements of 47 C.F.R. Section 73.68? ☑ Yes ☐ No ☐ Not Applicable

Attach as an Exhibit a detailed description of the sampling system as installed. Exhibit No. Engineering Exhibit

8. Operating constants:

RF common point or antenna current (in amperes) without modulation for night system
10.1 Amperes (Rounded from 10.0939 Amperes)

RF common point or antenna current (in amperes) without modulation for day system
10.1 Amperes (Rounded from 10.0939 Amperes)

Measured antenna or common point resistance (in ohms) at operating frequency
Night 53.0 Day 53.0

Measured antenna or common point reactance (in ohms) at operating frequency
Night -31.1 Day -31.1

Antenna indications for directional operation

Towers		Antenna monitor Phase reading(s) in degrees		Antenna monitor sample current ratio(s)		Antenna base currents	
		Night	Day	Night	Day	Night	Day
1 - East	ASRN 1006053	-0.6	-161.6	0.476	0.700	Not Required	Not Required
2 - East Central	ASRN 1006054	N/A	0.0	N/A	1.000	N/A	Not Required
3 - West Central	ASRN 1006055	0.0	-121.7	1.000	0.501	Not Required	Not Required
4 - West	ASRN 1006056	-0.3	N/A	0.607	N/A	Not Required	N/A

Manufacturer and type of antenna monitor: Potomac Instruments AM-1901-4

SECTION III - Page 2

9. Description of antenna system ((f directional antenna is used, the information requested below should be given for each element of the array. Use separate sheets if necessary.)

Type Radiator	Overall height in meters of radiator above base insulator, or above base, if grounded.	Overall height in meters above ground (without obstruction lighting)	Overall height in meters above ground (include obstruction lighting)	If antenna is either top loaded or sectionalized, describe fully in an Exhibit.
Uniform Cross-Section	100.6 m (all towers)	101.4 m (all towers)	102.4 m (all towers)	Exhibit No. N/A

Excitation ☑ Series ☐ Shunt

Geographic coordinates to nearest second. For directional antenna give coordinates of center of array. For single vertical radiator give tower location.

North Latitude	39 °	49 '	43 "	West Longitude	94 °	48 '	20 "

If not fully described above, attach as an Exhibit further details and dimensions including any other antenna mounted on tower and associated isolation circuits. Exhibit No. Engineering Exhibit

Also, if necessary for a complete description, attach as an Exhibit a sketch of the details and dimensions of ground system. Exhibit No. Engineering Exhibit

10. In what respect, if any, does the apparatus constructed differ from that described in the application for construction permit or in the permit?

No difference

11. Give reasons for the change in antenna or common point resistance.

Replacement of RF phasing and coupling equipment, replacement of open wire transmission lines with conventional coax lines, replacement of towers and base insulators, replacement of lighting system

I certify that I represent the applicant in the capacity indicated below and that I have examined the foregoing statement of technical information and that it is true to the best of my knowledge and belief.

Name (Please Print or Type)	Signature (check appropriate box below)
Garrison C. Cavell	
Address (include ZIP Code)	Date
Cavell, Mertz & Associates, Inc. 7732 Donegan Drive Manassas, VA 20109	May 09, 2011
	Telephone No. (Include Area Code)
	703 392-9090

☐ Technical Director

☐ Registered Professional Engineer

☐ Chief Operator

☑ Technical Consultant

☐ Other (specify)

Engineering Exhibit

APPLICATION FOR STATION LICENSE
METHOD OF MOMENTS
PROOF OF PERFORMANCE

prepared for

Eagle Communications, Inc.
Station KFEQ St. Joseph, Missouri
680 kHz DA-2 U 5 kW

May 9, 2011

Cavell, Mertz & Associates, Inc.

7732 Donegan Drive
Manassas, Virginia 20109
703.392.9090

Contents

Introduction 4
Antenna System Description 4
CDBS Information Correction Request 5
Daytime Mode – Present CDBS Values 5
Daytime Mode – Requested Corrected Values 5
Nighttime Mode – Present CDBS Values 6
Nighttime Mode – Requested Corrected Values 6
Array Geometry Summary 6
Ground System Description 7
Antenna Monitor and Sample System 8
MoM Modeling Process 9
Tower Impedance Measurements to Verify Method of Moments Model 9
Tower Base Environment Calculations 11
Representative Open Circuit Tower Base Environment Schematic for all KFEQ Towers. 13
Summary of Completed Open Circuit Analysis of KFEQ Tower Base Environment 13
Representative Open Circuit Tower Base Environment Schematic for all KESJ Towers .. 14
Summary of Completed Open Circuit Analysis of KESJ Tower Base Environment 14
Circuit Analysis Used for Each Tower to Verify Method of Moments Model 15
WCAP Tower Base Open Circuit "Self" Analysis – KFEQ Tower 1 (*East*) 15
WCAP Tower Base Open Circuit "Self" Analysis – KFEQ Tower 1 *(East)* (Continued) 16
WCAP Tower Base Open Circuit "Self" Analysis – KFEQ Tower 2 (*East-Central*) 17
WCAP Tower Base Open Circuit "Self" Analysis – KFEQ Tower 2 (*East-Central*) (Continued) 18
WCAP Tower Base Open Circuit "Self" Analysis – KFEQ Tower 3 (*West-Central*) 19
WCAP Tower Base Open Circuit "Self" Analysis – KFEQ Tower 3 (*West-Central*) (Continued) 20
WCAP Tower Base Open Circuit "Self" Analysis – KFEQ Tower 4 (*West*) 21
WCAP Tower Base Open Circuit "Self" Analysis – KFEQ Tower 4 (*West*) (Continued) 22
WCAP Tower Base Open Circuit "Self" Analysis – KFEQ Tower 5 (KESJ T1 (NW)) 23
WCAP Tower Base Open Circuit "Self" Analysis – KFEQ Tower 6 (KESJ T2 (SE)) 24
WCAP Tower Base Open Circuit "Self" Analysis – KFEQ Tower 7 (KESJ T3 (SW)) 25
WCAP Tower Base Open Circuit "Self" Analysis – KFEQ Tower 8 (KESJ T4 (NE)) 26

Details of MoM "Open Circuit" Modeling - for Towers Driven Individually 27
MoM Model Details for Towers Driven Individually – KFEQ Tower 1 - OC Self - (1 of 3) 29
MoM Model Details for Towers Driven Individually – KFEQ Tower 1 - OC Self - (2 of 3) 30
MoM Model Details for Towers Driven Individually – KFEQ Tower 1 - OC Self - (3 of 3) 31
MoM Model Details for Towers Driven Individually - Tower 2 - OC Self - (1 of 3) 32
MoM Model Details for Towers Driven Individually - Tower 2 - OC Self - (2 of 3) 33
MoM Model Details for Towers Driven Individually - Tower 2 - OC Self - (3 of 3) 34
MoM Model Details for Towers Driven Individually - Tower 3 - OC Self - (1 of 3) 35
MoM Model Details for Towers Driven Individually - Tower 3 - OC Self - (2 of 3) 36
MoM Model Details for Towers Driven Individually - Tower 3 - OC Self - (3 of 3) 37
MoM Model Details for Towers Driven Individually - Tower 4 - OC Self - (1 of 3) 38
MoM Model Details for Towers Driven Individually - Tower 4 - OC Self - (2 of 3) 39
MoM Model Details for Towers Driven Individually - Tower 4 - OC Self - (3 of 3) 40
MoM Model Details for Towers Driven Individually - Tower 5 - OC Self - (1 of 3) 41
MoM Model Details for Towers Driven Individually - Tower 5 - OC Self - (2 of 3) 42
MoM Model Details for Towers Driven Individually - Tower 5 - OC Self - (3 of 3) 43
MoM Model Details for Towers Driven Individually - Tower 6 - OC Self - (1 of 3) 44
MoM Model Details for Towers Driven Individually - Tower 6 - OC Self - (2 of 3) 45
MoM Model Details for Towers Driven Individually - Tower 6 - OC Self - (3 of 3) 46
MoM Model Details for Towers Driven Individually - Tower 7 - OC Self – (1 of 3) 47
MoM Model Details for Towers Driven Individually - Tower 7 - OC Self - (2 of 3) 48
MoM Model Details for Towers Driven Individually - Tower 7 - OC Self - (3 of 3) 49
MoM Model Details for Towers Driven Individually - Tower 8 - OC Self - (1 of 3) 49
MoM Model Details for Towers Driven Individually - Tower 8 - OC Self - (2 of 3) 51
MoM Model Details for Towers Driven Individually - Tower 8 - OC Self - (3 of 3) 52
Derivation of Directional Antenna Operating Parameters 52
MoM Model Details – Daytime Directional Antenna Array Synthesis (1 of 7) 54
MoM Model Details – Daytime Directional Antenna Array Synthesis (2 of 7) 55
MoM Model Details – Daytime Directional Antenna Array Synthesis (3 of 7) 56
MoM Model Details - Daytime Directional Antenna Array Synthesis (4 of 7) 57
MoM Model Details - Daytime Directional Antenna Array Synthesis (5 of 7) 58
MoM Model Details - Daytime Directional Antenna Array Synthesis (6 of 7) 59
MoM Model Details - Daytime Directional Antenna Array Synthesis (7 of 7) 60

MoM Model Details – Nighttime Directional Antenna Array Synthesis (1 of 7) 61
MoM Model Details – Nighttime Directional Antenna Array Synthesis (2 of 7) 62
MoM Model Details – Nighttime Directional Antenna Array Synthesis (3 of 7) 63
MoM Model Details - Nighttime Directional Antenna Array Synthesis (4 of 7) 64
MoM Model Details - Nighttime Directional Antenna Array Synthesis (5 of 7) 65
MoM Model Details - Nighttime Directional Antenna Array Synthesis (6 of 7) 66
MoM Model Details - Nighttime Directional Antenna Array Synthesis (7 of 7) 67
Derivation of Directional Antenna System "Antenna Monitor" Parameters 68
Daytime and Nighttime Directional Antenna System "Antenna Monitor" Parameters 69
Daytime Directional Antenna Monitor Operating Parameters 69
Nighttime Directional Antenna Monitor Operating Parameters 69
Survey Certification 70
Sampling System Measurements 70
Reference Point Field Strength Measurements 72
Daytime Pattern Reference Point Field Measurements 73
Reference Point Field Strength Measurements – 206° Day (Monitored Minima) 73
Reference Point Field Strength Measurements – 273° Day (Maxima) 73
Reference Point Field Strength Measurements – 330° Day (Monitored Minima) 74
Nighttime Pattern Reference Point Field Measurements 74
Reference Point Field Strength Measurements – 3° Night (Maxima) 74
Reference Point Field Strength Measurements – 73.5° Night (Monitored Minima) 74
Reference Point Field Strength Measurements – 103° Night (Monitored Minima) 74
Reference Point Field Strength Measurements – 245° Night (Monitored Minima) 74
Reference Point Field Strength Measurements – 302° Night (Monitored Minima) 75
Direct Measurement of Power 75
RF Exposure Evaluation 76
Satisfaction of CP Conditions of Collocated KESJ 77
Certification 80

Introduction

This Engineering Statement has been prepared on behalf of *Eagle Communications, Inc.* ("*Eagle*"), licensee of radio station KFEQ, St. Joseph, Missouri, (Facility ID 34419). It supports *Eagle's* **Application for License** following completion of the complete renovation of the station's antenna system. (This renovation included replacement of the station's RF phasing and coupling systems, transmission lines, sample lines, sampling transformers, towers, base insulators, tower lighting equipment, and antenna monitor.) Additionally, this proof follows completion of construction (on the same property) of a new ND-Day, DA-N antenna system for co-owned KESJ 1550 kHz, St. Joseph, Missouri.[1]

Rather than engage in a conventional "partial" proof of performance, *Eagle* instead elected to conduct a "Method of Moments" ("MoM") Proof-of-Performance on the re-constructed KFEQ directional array. Accordingly, the information provided in this Statement demonstrates that the directional antenna parameters for both KFEQ patterns have been determined in accordance with the requirements of Section 73.151(c) of the FCC's Rules.[2] As required by the Commission's Rules, the KFEQ antenna system has been adjusted to produce antenna monitor parameters that are within +/- 5 percent in ratio and +/- 3 degrees in phase of the MoM modeled values. Thus, as demonstrated here, the newly reconstructed antenna system is in compliance with pertinent Commission Rules and Policies.

Antenna System Description

The re-constructed directional antenna facility consists of four uniform cross-section, guyed, base-insulated, series fed towers, placed in the same locations as the original towers. The new KESJ 4-tower antenna array is nested between two of the four elements of the KFEQ antenna system. This arrangement is fully documented in the KESJ application for CP and license, and is also described elsewhere in this document.

---

[1] KESJ (Facility ID Number 8767) is presently operating under PTA following completion of construction of a new antenna system per its Construction Permit (BP-20100317AAN). An application for license has been filed with the Commission along with the required proof-of-performance (BMML-20110322ABY).

[2] The KFEQ day directional antenna array is eligible for licensing under the Commission's MoM Rules in that the antenna system consists of series fed, base insulated towers, using a conventional, buried-wire, ground system.

Conventional tower lighting is installed on the KFEQ towers per the requirements of the FCC and FAA. FCC Antenna Structure Registration Numbers ("ASRN") have long been established for the KFEQ tower system, as shown below. No FAA notification or ASRN's are required for KESJ, as documented in that station's various filings before the Commission.

CDBS Information Correction Request

In reviewing the information in advance of proofing the array, it was discovered that the data as presented in the Commissions CDBS system differs from what is contained in KFEQ's 1994 license (BZ-19941031AA – copy included as Attachment I) and the application for license that preceded that instrument. Also, the association of the tower numbering, as referenced against the ASRNs and the physical locations, is not consistent.

Accordingly, it is herein respectfully requested that the CDBS records be updated as follows, that all towers be referenced against the eastern-most (lowest ASRN) tower consistent with station use, and that the theoretical field parameters be normalized against the highest power tower. The proposed revisions are shown below along with existing CDBS information for both the day and night modes of operation.

Daytime Mode – Present CDBS Values

FCC ASRN	"CDBS" Tower Number	Field Ratio	CDBS Phase	CDBS Spacing	CDBS Orientation	Reference Switch
1006053	1	0.500	19.5°	0°	0° T	--
1006054	2	0.934	142.9°	95°	93° T	--
1006055	3	0.630	-19.5°	95°	93° T	Ref Twr 2

Daytime Mode – Requested Corrected Values

FCC ASRN	Actual Tower Location	Tower Number	1994 Lic. Theo. Field Ratio	Normalized Theoretical Field Ratio*	1994 Lic. Theo. Phase	Normalized Theoretical Phase*	Requested Corrected Spacing**	Requested Corrected Orientation**	Revised Reference Switch
1006053	East	1	1.26	0.675	-19.5°	-162.4°	0.0°	0.0° T	--
1006054	East-Central	2	1.868	1.000	142.9°	0.0°	95°	273° T	--
1006055	West-Central	3	1.0	0.535	19.5°	-123.4°	190°	273° T	--
1006056	West	4	Not Used	Not Used	Not Used	--	--	--	N/A

*- Referenced to highest field tower (Tower 2 – East Central)

-Referenced to *Eastern-most* tower (Tower 1). **Note: West tower not used in Day Mode.

Nighttime Mode – Present CDBS Values

FCC ASRN	"CDBS" Tower Number	Field Ratio	CDBS Phase	CDBS Spacing	CDBS Orientation	Reference Switch
1006053	1	1.0	0°	0°	0° T	--
1006054	2	1.8	0°	190°	93° T	--
1006056	3	0.81	0°	190°	93° T	Ref Twr 2

Nighttime Mode – Requested Corrected Values

FCC ASRN	Actual Tower Location	Tower Number	1994 Lic. Theo. Field Ratio	Normalized Theoretical Field Ratio*	1994 Lic. Theo. Phase	Normalized Theoretical Phase*	Requested Corrected Spacing**	Requested Corrected Orientation**	Revised Reference Switch
1006053	East	1	0.81	0.450	0°	0°	0.0°	0.0° T	--
1006054	East-Central	2	Not Used	Not Used	Not Used	--	--	--	N/A
1006055	West-Central	3	1.80	1.000	0°	0°	190°	273° T	--
1006056	West	4	1.0	0.556	0°	0	380°	273° T	--

*- Referenced to highest field tower (Tower 3 – West Central)

-Referenced to *Eastern-most* tower (Tower 1). **Note: East-Central tower not used in Night Mode.

Array Geometry Summary

The baseline physical (unadjusted) antenna array geometry for the modeled KFEQ antenna array is summarized in the following table and includes both the KFEQ and KESJ antenna structures. Tower distances and bearings are specified with respect to the KFEQ geometric reference tower (Tower #1 - the Eastern-most tower in the KFEQ array). The land surveyor involved with the KESJ certification provided necessary information for the locations of the various towers on the site, providing a basis for the tabulation below, and the array model.

FCC ASRN	KFEQ Tower Number	Distance* From Reference Tower (KFEQ Tower 1 - East)	Orientation From Reference Tower (KFEQ Tower 1 - East)	Tower Physical Height*	Tower Physical Radius
1006053	**1** (East)	0.0°	0.0° T	82.13°	0.231 m
1006054	**2** (E-C)	95°	273° T	82.13°	0.231 m
1006055	**3** (W-C)	190°	273° T	82.13°	0.231 m
1006056	**4** (West)	380°	273° T	82.13°	0.231 m
Not Required	**5** (KESJ T1)	309.65°	273.4° T	39.47°	0.198 m
Not Required	**6** (KESJ T2)	261.72°	268.7° T	39.47°	0.198 m
Not Required	**7** (KESJ T3)	303.27°	265.3° T	39.47°	0.198 m
Nor Required	**8** (KESJ T4)	273.41°	277.4° T	39.47°	0.198 m

*- Distances and heights are expressed in electrical degrees at the KFEQ frequency of 680 kHz

As described previously, the KESJ array is constructed between the two western towers of the existing four tower KFEQ antenna system (between the towers having FCC ASRNs of 1006055 and 1006056). None of the KESJ towers are active at the KFEQ frequency due to their length at the KFEQ frequency and the involved base components. Nevertheless, these towers are considered in the KFEQ MiniNEC analysis, as shown elsewhere in this document.

Within the KFEQ antenna system, using ASRNs for clarity, towers 1006053, 1006054 and 1006055 (1-E, 2-EC and 3-WC) are employed for the day mode, while KFEQ tower 1006056 (4-W) is detuned. Towers 1006053, 1006055 and 1006056 (1-E, 3-WC, 4-W) are employed for the KFEQ night mode, while KFEQ tower 1006054 (2-EC) is detuned. These detuned towers are considered for each pattern mode for the KFEQ MiniNEC analysis.

Ground System Description

KFEQ uses a buried copper ground system consisting of 7.3 meter by 7.3 meter copper screens at the tower bases and buried soft drawn copper radial wires and copper straps. The usual radial pattern is followed, with 120 equally spaced conductors arrayed around each tower out to a distance of 91.4 meters, except where bonded to intersecting transverse copper straps.

As part of the simultaneous KESJ construction on the same site, a new ground system was installed for the 4 KESJ towers, between KFEQ towers 1006055 and 1005056. This system was tied into the existing KFEQ ground system via transverse and direct copper straps. This improved the ground plane between the two widely spaced end towers of the KFEQ array.

It should be noted that, during the KFEQ renovation project, an inspection of the ground system environment was undertaken in the immediate vicinity of the KFEQ tower bases. This inspection, and initial impedance measurements, suggested that repairs were in order in the area close to the towers. Accordingly, the original ground system was uncovered at each tower base, repairs were made where possible, and supplemental copper screening, copper radial wires, and

copper strap were buried as necessary to properly restore the ground system. Subsequent impedance measurements confirmed the efficacy of the repair effort.

Antenna Monitor and Sample System

A new *Potomac Instruments Inc.* Model AM-1901-4 Antenna Monitor, having Serial Number 839, was purchased for this renovation project. The calibration date for this monitor is October 18, 2010. The calibration was verified at the time of the proof of performance.

New *Delta Electronics, Inc.* "TCT-3" toroidal current transformers ("TCTs") were purchased (as part of the new RF phasing and coupling system) to provide sample currents to the antenna monitor. The operating characteristics of these TCTs were verified per the requirements of the FCC's Rules prior to antenna array adjustment. (See following separate section of this Statement on Sample System TCT Calibration.)

New phase stabilized, "connectorized", equal length, half-inch *Andrew Corporation* Model 42394-14VA coaxial sample cables were installed at the site under equal environmental conditions, all being buried except where they extend equally to terminating locations. The electrical length and characteristic impedance of these lines were verified prior to array adjustment per the Commission's MoM proof requirements. (A separate section of this Statement documents the sample line lengths and their characteristic impedances.)

This sampling system conforms to the provisions of Section 73.68(a) of the Commission's Rules that were in effect prior to January 1, 1986. Accordingly, if pertinent, approval of this sampling system is being requested pursuant to the FCC's Public Notice of December 9, 1985. Further, as will be demonstrated herein, the installed antenna monitor - sampling system also complies with the requirements of the newly adopted MoM Proof Rules under Section 73.151(c).

MoM Modeling Process

The procedure for conducting a MoM proof involves making impedance measurements at each of the towers to serve as benchmarks for calibrating the array model, characterizing the base environment and taking note of any likely sources of stray base reactances. An initial model of the characteristics of each tower as an individual ("self" modeling) is then done. Model tower characteristics (height and width) can then be adjusted to "converge" the modeled resistance of the tower to the measured values. Reactance data are then converged by using conventional circuit analysis methods to account for the stray feed reactances encountered at each tower base.

Using the calibrated antenna model, theoretical field parameters can then be introduced into the software to synthesize the desired pattern. Required base currents and driving point impedance conditions are derived along with a set of antenna monitor parameters for the modeled array. These parameters are then used as "targets" to achieve the authorized pattern as the RF phasing and coupling system is adjusted. The following text describes the specific approach taken in the modeling and adjustment of this particular directional antenna system.

Tower Impedance Measurements to Verify Method of Moments Model

In order to calibrate the MoM model, impedance measurements were taken at each of the tower bases. As discussed in the previous section, by relating the individual as-measured antenna conditions to the model ("converging the model"), confidence is achieved for the derivation of system (antenna monitor) parameters. Since there are four "unused" towers involved (the towers of the co-located KESJ array), measurements also were taken at the bases of these structures at the KFEQ frequency and incorporated into the development of the KFEQ model. Measurements were also taken of "as-adjusted" filter/trap/detuning circuits and incorporated into the base circuit analysis where appropriate.

In particular, impedance measurements were conducted using a precision, calibrated measurement system consisting of a *Hewlett-Packard* model 8753C network analyzer in conjunction with a *Tunwall Radio* directional coupler system and an *Electronic Navigation*

Industries (ENI) Model 310 L RF amplifier. Analyzer calibration was field verified prior to each measurement using the procedures specified in the manufacturer's instruction manual and using precision calibration standards.

After calibration of the system, antenna base impedance measurements were made at each tower at the location of the final output jacks[3] ("J-plugs") within the respective Antenna Tuning Units ("ATUs"). As each tower was being measured, all the other tower bases were "open circuited" at the same J-plug impedance measurement locations.

This J-Plug reference point at each ATU is located immediately adjacent to the sampling transformer of the antenna monitor system at the output of the ATU system enclosure. At each ATU enclosure, it was confirmed that the tower RF current passes directly from that point, through heavy conductors, through the tuning unit enclosure bowl insulator, and on to the tower attachment point above the base insulators, without any intervening components or devices, unless otherwise noted and accounted for in the following text.

With respect to the KFEQ towers, filtering and detuning circuits are located after the sampling transformers, as is a static drain choke for each tower. Therefore their presence was considered in addition to the other existing base reactances (such as the "Austin Ring" lighting transformers and the base insulators) at the KFEQ operating frequency of 680 kHz. The KFEQ West Tower (Tower 4) is unused while the station is in the day mode, therefore a 680 kHz detuning reactance is switched into this tower's circuitry while the station is in the daytime mode. This reactance was adjusted to the predicted value necessary to detune this tower (which is reported as a lumped load in the pertinent portion of the analysis. Similarly, the East-Central tower (Tower 2) is unused in the nighttime mode of operation, therefore it was handled and reported in a similar manner. Additional 680 kHz pass – 1550 kHz reject circuits are located in the KFEQ antenna tuning units, but since there are located before the TCT reference point, their existence is not pertinent to the analysis.

[3] This point is referred to in this report as the tower "reference point" as it is the location where the TCT's samples are taken.

Regarding the KESJ towers, there are no components in shunt with the KESJ ATU outputs following the sampling transformers other than static drain chokes. The presence of the static drain chokes was taken into account using the manufacturer's stated inductive reactances at 680 kilohertz during the calibration of the MoM model to the measured base impedances. The presence of the tower base insulator's reactances was also taken into account for reactance consequences at the 680 kHz operating frequency. Consideration was also made of the potential influence of the KESJ towers on the KFEQ antenna system. None is expected to occur because the KESJ towers are physically 0.11 wavelength at 680 kHz and therefore are not sufficiently tall enough to flow meaningful current at that frequency. Further, the KESJ tuning units have 680 kHz stop traps installed (prior to the TCT reference point – hence they are not cognizable in the analysis) which further prevents current flow to ground from the tower, effectively isolating the KESJ towers. As such, these towers are electrically transparent to KFEQ without further special treatment. The KESJ towers were nevertheless included in the KFEQ analysis. The high reactance base area lumped loads created by the static drain chokes and base insulators were incorporated in the model construction, as shown in the following. Measured impedances at the array reference points at 680 KHz materially agree with the modeled expectations.

Tower Base Environment Calculations

Tower base environment circuit calculations were performed both manually and by using the "WCAP" network analysis program software provided by *Westberg Consulting.* (The WCAP software performs nodal analysis calculations, similar to "SPICE" and other circuit analysis software.) These calculations were used throughout the proof process to relate the MoM modeled impedances to the ATU output measurement (reference) points.

As shown on the following pages, the Open Circuit Reactance ("X_{OC}") found at each tower was calculated for the assumed base conditions for all towers. This value was then used in the MoM model as a "load" at ground level for the open circuited ("OC") MoM individual model "self" (individual tower) case. Using these assumed lumped loads, base environment, and MoM analysis, initial values were derived and the model converged.

A schematic of the assumed circuit, along with a summary of results and a tabulation of WCAP calculated values, is provided in the following pages. Both the KFEQ and the KESJ cases are individually discussed since the base circuits are different for each station. Values for the various shunt stray reactances for base insulators, static drain chokes, and lighting system components (if present) are based upon manufacturer supplied information, and are included below the following representative schematics, along with their combined "lumped load" assumptions.

In each of the WCAP tabulations and the representative schematic shown for KFEQ, "Node 2" represents the ATU output "reference point" (TCT location). "Node 5" represents the tower feed-point. "Node 0" represents ground potential. In the Open Circuit "Tower Self" analysis tabulations for each tower, the calculated ATU output impedances appear under the "TO IMPEDANCE" columns, following the "phantom" 1 ohm resistors (R_{3-2}). This phantom resistor is included in series with the drive current sources (I_{0-3}) to provide defined calculation points in the software. The tower feed-point impedances from the MoM model are represented by "complex loads" from "Node 5" to ground (R_{5-0}).

In each of the WCAP tabulations and the representative schematic shown for KESJ, "Node 2" represents the ATU output "reference point" (TCT location). "Node 3" represents the tower feed-point. "Node 0" represents ground potential. In the Open Circuit "Tower Self" analysis tabulations for each tower, the calculated ATU output impedances appear under the "TO IMPEDANCE" columns, following the "phantom" 1 ohm resistors (R_{1-2}). As with the KFEQ analysis, this phantom resistor is included in series with the drive current sources (I_{0-1}) to provide defined calculation points in the software. The tower feed-point impedances from the MoM model are represented by "complex loads" from "Node 3" to ground (R_{3-0}).

As shown, the modeled and measured base impedances at the ATU output jacks (with the other towers open circuited at their ATU output jacks) agree with each other within +/- 2 ohms and +/- 4 percent for resistance and reactance, as required under the Commission's MoM Rules.

Representative Open Circuit Tower Base Environment Schematic for all KFEQ Towers

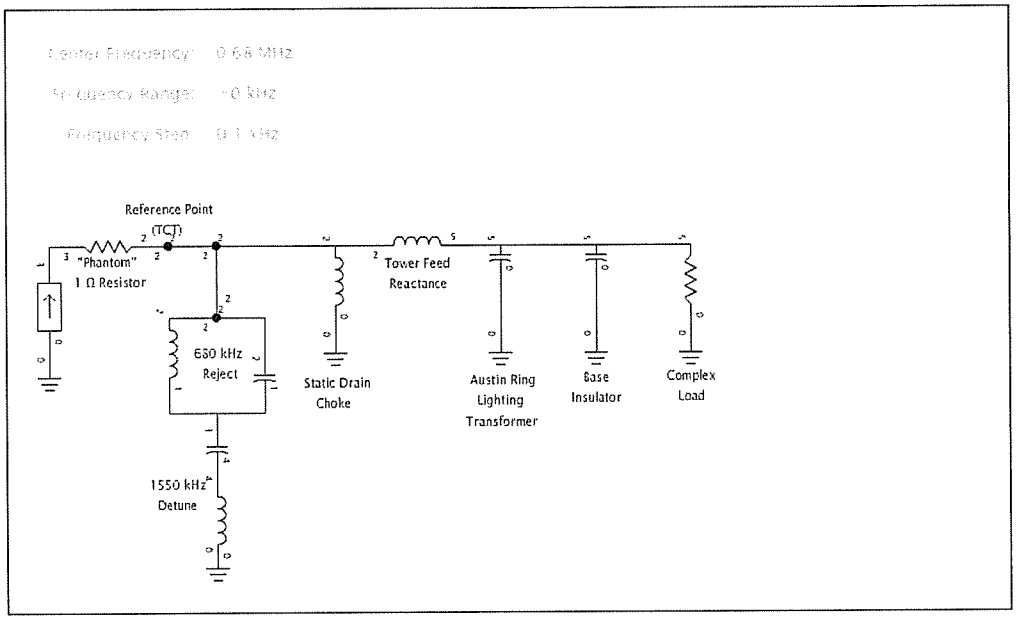

Summary of Completed Open Circuit Analysis of KFEQ Tower Base Environment

Tower Number and Location	Tower Feed Inductance	Tower Feed Reactance X_L	Complex Load Impedance MiniNEC $Z_{Modeled}$	Reference Point* Z_{ATU} Modeled	Reference Point* Z_{ATU} Measured
KFEQ 1 (East)	6.772 µH	28.9 Ω	35.598 +j0.55324 Ω	35.48 +j29.298 Ω	35.6 +j29.3 Ω
KFEQ 2 (East-Central)	1.804 µH	7.70 Ω	38.055 +j18.251 Ω	38.18 +j25.813 Ω	38.2 +j25.8 Ω
KFEQ 3 (West-Central)	1.838 µH	7.90 Ω	40.391 +j20.308 Ω	40.54 +j28.001 Ω	41.3 +j28.0 Ω
KFEQ 4 (West)	6.040 µH	25.8 Ω	36.223 +j1.3596 Ω	36.13 +j26.978 Ω	37.1 +j26.9 Ω

Notes:

* - At KFEQ ATU Output Jack J-Plug (TCT Location); Designated as ATU "Reference Point"

Static Drain Choke Reactance at 680 kHz: +15,500 Ω Inductance: 3627.8 µH

Base Insulator Reactance at 680 kHz: - 14,628 Ω Capacitance: ~ 16 pF

Austin Ring Lighting Transformer Reactance at 680 kHz: - 10,176 Ω Capacitance: ~ 23 pF

Lumped Load Assumption at 680 kHz: - 9792.9 Ω (Base Insulator, Austin Ring Transformer and Static Drain Choke)

Reject/Detune circuit measured values are included in the following KFEQ Tower WCAP Summaries

Representative Open Circuit Tower Base Environment Schematic for all KESJ Towers

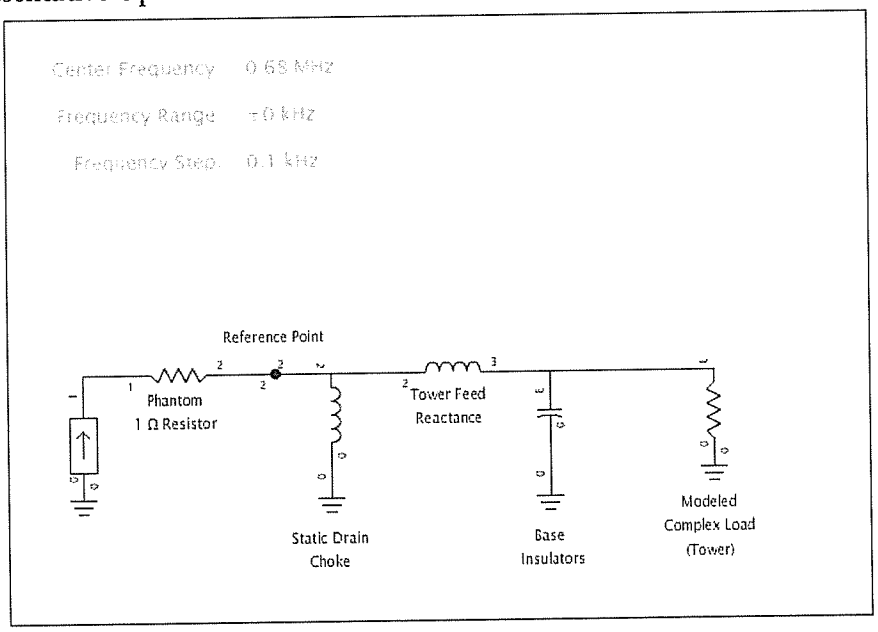

Summary of Completed Open Circuit Analysis of KESJ Tower Base Environment

Tower Number And Location	Tower Feed Inductance	Tower Feed Reactance X_L	Complex Load Impedance MiniNEC $Z_{Modeled}$	Reference Point* Z_{ATU} Modeled	Reference Point* Z_{ATU} Measured
KFEQ 5 (KESJ T-1 - NW)	7.196 µH	30.7 Ω	5.6756 –j284.61 Ω	6.04 –j261.110 Ω	5.30 –j261.1 Ω
KFEQ 6 (KESJ T-2 - SE)	7.274 µH	31.1 Ω	5.6666 –j284.58 Ω	6.03 –j260.706 Ω	5.10 –j260.7 Ω
KFEQ 7 (KESJ T-3 - SW)	6.924 µH	29.6 Ω	5.6382 –j284.52 Ω	6.00 –j262.313 Ω	5.39 –j262.3 Ω
KFEQ 8 (KESJ T-4 - NW)	7.223 µH	30.9 Ω	5.5575 –j286.32 Ω	5.92 –j262.802 Ω	4.21 –j262.8 Ω

Notes:

* - At KESJ ATU Output Jack J-Plug (TCT Location); Designated as ATU "Reference Point"

Static Drain Choke Reactance at 680 kHz: +4,605.8 Ω Inductance: 1,087.1 µH

Base Insulator Reactance at 680 kHz: - 11,702.6 Ω Capacitance: ~ 20 pF

Lumped Load Assumption at 680 kHz: + 7,594.9 Ω (Base Insulator and Static Drain Choke)

Circuit Analysis Used for Each Tower to Verify Method of Moments Model

WCAP Tower Base Open Circuit "Self" Analysis – KFEQ Tower 1 (*East*)

KFEQ T1 (E) Open Circuit – Self WCAP OUTPUT AT FREQUENCY: 0.680 MHz

NODE VOLTAGES

Node:	1	0.0849	∡	39.5455°	V
Node:	2	46.0155	∡	39.5455°	V
Node:	3	46.7909	∡	38.7658°	V
Node:	4	0.0363	∡	-140.4545°	V
Node:	5	35.5405	∡	0.6593°	V

WCAP PART			CURRENT IN				CURRENT OUT			
WCAP PART			BRANCH VOLTAGE				BRANCH CURRENT			
R	5→0	35.58900000	35.54	∡	0.659°	V	1.00	∡	-0.231°	A
C	5→0	0.00001600	35.54	∡	0.659°	V	0.00	∡	90.659°	A
C	5→0	0.00002300	35.54	∡	0.659°	V	0.00	∡	90.659°	A
L	2→5	6.77200000	28.89	∡	90.108°	V	1.00	∡	0.108°	A
L	2→0	3627.80000000	46.02	∡	39.545°	V	0.00	∡	-50.455°	A
C	2→1	0.00208000	45.93	∡	39.545°	V	0.41	∡	129.545°	A
L	2→1	26.37000000	45.93	∡	39.545°	V	0.41	∡	-50.455°	A
C	1→4	0.00100000	0.12	∡	39.545°	V	0.01	∡	129.545°	A
L	4→0	16.40000000	0.04	∡	-140.455°	V	0.01	∡	129.545°	A
R	3→2	1.00000000	1.00	∡	-0.000°	V	1.00	∡	-0.000°	A

WCAP PART			FROM IMPEDANCE				TO IMPEDANCE			
R	5→0	35.58900000	35.59	+	j	0.553	0.00	+	j	0.000
C	5→0	0.00001600	0.00	-	j	14628.212	0.00	+	j	0.000
C	5→0	0.00002300	0.00	-	j	10176.147	0.00	+	j	0.000
L	2→5	6.77200000	35.59	+	j	29.276	35.59	+	j	0.342
L	2→0	3627.80000000	0.00	+	j	15500.015	0.00	+	j	0.000
C	2→1	0.00208000	0.00	-	j	112.733	0.00	-	j	0.208
L	2→1	26.37000000	-0.01	+	j	112.876	0.00	+	j	0.208
C	1→4	0.00100000	0.00	-	j	163.981	-0.01	+	j	70.070
L	4→0	16.40000000	0.00	+	j	70.070	0.00	+	j	0.000
R	**3→2**	1.00000000	36.48	+	j	29.298	**35.48**	**+**	**j**	**29.298**

Measured: 35.6 + j 29.3
(Difference: 0.120 0.002)

WCAP Tower Base Open Circuit "Self" Analysis – KFEQ Tower 1 ***(East)*** **(Continued)**

KFEQ T1 (E) Open Circuit – Self **WCAP OUTPUT AT FREQUENCY: 0.680 MHz**

WCAP PART **VSWR**

WCAP INPUT DATA:

	0.6800	0.00010000	1	
R	35.58900000	5	0	0.55324000
C	0.00001600	5	0	
C	0.00002300	5	0	
L	6.77200000	2	5	0.00000000
L	3627.80000000	2	0	0.00000000
C	0.00208000	2	1	
L	26.37000000	2	1	0.00000000
C	0.00100000	1	4	
L	16.40000000	4	0	0.00000000
R	1.00000000	3	2	0.00000000
I	1.00000000	0	3	0.00000000

WCAP Tower Base Open Circuit "Self" Analysis – KFEQ Tower 2 (*East-Central*)

KFEQ T2 (EC) Open Circuit – Self **WCAP OUTPUT AT FREQUENCY: 0.680 MHz**

NODE VOLTAGES

Node:	1	0.0850	∡	34.0618°	V
Node:	2	46.0881	∡	34.0618°	V
Node:	3	46.9198	∡	33.3778°	V
Node:	4	0.0363	∡	-145.9382°	V
Node:	5	42.2750	∡	25.3744°	V

WCAP PART			CURRENT IN				CURRENT OUT			
WCAP PART			BRANCH VOLTAGE				BRANCH CURRENT			
R	5→0	38.05500000	42.28	∡	25.374°	V	1.00	∡	-0.248°	A
C	5→0	0.00001600	42.28	∡	25.374°	V	0.00	∡	115.374°	A
C	5→0	0.00002300	42.28	∡	25.374°	V	0.00	∡	115.374°	A
L	2→5	1.80400000	7.70	∡	90.117°	V	1.00	∡	0.117°	A
L	2→0	3627.80000000	46.09	∡	34.062°	V	0.00	∡	-55.938°	A
C	2→1	0.00208000	46.00	∡	34.062°	V	0.41	∡	124.062°	A
L	2→1	26.37000000	46.00	∡	34.062°	V	0.41	∡	-55.938°	A
C	1→4	0.00100000	0.12	∡	34.062°	V	0.01	∡	124.062°	A
L	4→0	16.40000000	0.04	∡	-145.938°	V	0.01	∡	124.062°	A
R	3→2	1.00000000	1.00	∡	0.000°	V	1.00	∡	0.000°	A

WCAP PART			FROM IMPEDANCE				TO IMPEDANCE			
R	5→0	38.05500000	38.05	+	j	18.251	0.00	+	j	0.000
C	5→0	0.00001600	0.00	-	j	14628.212	0.00	+	j	0.000
C	5→0	0.00002300	0.00	-	j	10176.147	0.00	+	j	0.000
L	2→5	1.80400000	38.29	+	j	25.771	38.29	+	j	18.063
L	2→0	3627.80000000	0.01	+	j	15500.015	0.00	+	j	0.000
C	2→1	0.00208000	0.01	-	j	112.733	0.00	-	j	0.208
L	2→1	26.37000000	-0.01	+	j	112.876	0.00	+	j	0.208
C	1→4	0.00100000	0.00	-	j	163.981	-0.01	+	j	70.070
L	4→0	16.40000000	-0.01	+	j	70.070	0.00	+	j	0.000
R	**3→2**	1.00000000	39.18	+	j	25.813	**38.18**	**+**	**j**	**25.813**

Measured: 38.2 + j 25.8
(Difference: 0.02 0.013)

WCAP Tower Base Open Circuit "Self" Analysis – KFEQ Tower 2 (*East-Central*) (Continued)

KFEQ T2 (EC) Open Circuit – Self **WCAP OUTPUT AT FREQUENCY: 0.680 MHz**

WCAP PART **VSWR**

WCAP INPUT DATA:

	0.6800	0.00010000	1	
R	38.05500000	5	0	18.25100000
C	0.00001600	5	0	
C	0.00002300	5	0	
L	1.80400000	2	5	0.00000000
L	3627.80000000	2	0	0.00000000
C	0.00208000	2	1	
L	26.37000000	2	1	0.00000000
C	0.00100000	1	4	
L	16.40000000	4	0	0.00000000
R	1.00000000	3	2	0.00000000
I	1.00000000	0	3	0.00000000

WCAP Tower Base Open Circuit "Self" Analysis – KFEQ Tower 3 (*West-Central*)

KFEQ T3 (WC) Open Circuit – Self **WCAP OUTPUT AT FREQUENCY: 0.680 MHz**

NODE VOLTAGES

Node:	1	0.0909	∡	34.6314°	V
Node:	2	49.2728	∡	34.6314°	V
Node:	3	50.0988	∡	33.9814°	V
Node:	4	0.0388	∡	-145.3686°	V
Node:	5	45.2938	∡	26.4296°	V

WCAP PART			CURRENT IN				CURRENT OUT			
WCAP PART			**BRANCH VOLTAGE**				**BRANCH CURRENT**			
R	5→0	40.39100000	45.29	∡	26.430°	V	1.00	∡	-0.263°	A
C	5→0	0.00001600	45.29	∡	26.430°	V	0.00	∡	116.430°	A
C	5→0	0.00002300	45.29	∡	26.430°	V	0.00	∡	116.430°	A
L	2→5	1.83800000	7.84	∡	90.124°	V	1.00	∡	0.124°	A
L	2→0	3627.80000000	49.27	∡	34.631°	V	0.00	∡	-55.369°	A
C	2→1	0.00208000	49.18	∡	34.631°	V	0.44	∡	124.631°	A
L	2→1	26.37000000	49.18	∡	34.631°	V	0.44	∡	-55.369°	A
C	1→4	0.00100000	0.13	∡	34.631°	V	0.01	∡	124.631°	A
L	4→0	16.40000000	0.04	∡	-145.369°	V	0.01	∡	124.631°	A
R	3→2	1.00000000	1.00	∡	-0.000°	V	1.00	∡	-0.000°	A

WCAP PART			FROM IMPEDANCE				TO IMPEDANCE			
R	5→0	40.39100000	40.39	+	j	20.308	0.00	+	j	0.000
C	5→0	0.00001600	0.00	-	j	14628.212	0.00	+	j	0.000
C	5→0	0.00002300	-0.01	-	j	10176.147	0.00	+	j	0.000
L	2→5	1.83800000	40.66	+	j	27.955	40.66	+	j	20.102
L	2→0	3627.80000000	0.01	+	j	15500.015	0.00	+	j	0.000
C	2→1	0.00208000	0.01	-	j	112.733	0.00	-	j	0.208
L	2→1	26.37000000	-0.01	+	j	112.876	0.00	+	j	0.208
C	1→4	0.00100000	0.00	-	j	163.981	0.01	+	j	70.070
L	4→0	16.40000000	0.00	+	j	70.070	0.00	+	j	0.000
R	**3→2**	1.00000000	41.54	+	j	28.001	**40.54**	**+**	**j**	**28.001**

Measured: 41.3 + j 28.0
(Difference: 0.76 0.001)

WCAP Tower Base Open Circuit "Self" Analysis – KFEQ Tower 3 (*West-Central*) (Continued)

KFEQ T3 (WC) Open Circuit – Self WCAP OUTPUT AT FREQUENCY: 0.680 MHz

WCAP PART VSWR

WCAP INPUT DATA:

	0.6800	0.00010000	1	
R	40.39100000	5	0	20.30800000
C	0.00001600	5	0	
C	0.00002300	5	0	
L	1.83800000	2	5	0.00000000
L	3627.80000000	2	0	0.00000000
C	0.00208000	2	1	
L	26.37000000	2	1	0.00000000
C	0.00100000	1	4	
L	16.40000000	4	0	0.00000000
R	1.00000000	3	2	0.00000000
I	1.00000000	0	3	0.00000000

WCAP Tower Base Open Circuit "Self" Analysis – KFEQ Tower 4 (*West*)

KFEQ T4 (W) Open Circuit – Self **WCAP OUTPUT AT FREQUENCY: 0.680 MHz**

NODE VOLTAGES

Node:	1	0.0832	∡	36.7457°	V
Node:	2	45.0945	∡	36.7457°	V
Node:	3	45.8997	∡	35.9989°	V
Node:	4	0.0355	∡	-143.2543°	V
Node:	5	36.2040	∡	1.9141°	V

WCAP PART			CURRENT IN BRANCH VOLTAGE					CURRENT OUT BRANCH CURRENT			
R	5→0	36.22300000	36.20	∡	1.914°	V		1.00	∡	-0.235°	A
C	5→0	0.00001600	36.20	∡	1.914°	V		0.00	∡	91.914°	A
C	5→0	0.00002300	36.20	∡	1.914°	V		0.00	∡	91.914°	A
L	2→5	6.04000000	25.77	∡	90.110°	V		1.00	∡	0.110°	A
L	2→0	3627.80000000	45.09	∡	36.746°	V		0.00	∡	-53.254°	A
C	2→1	0.00208000	45.01	∡	36.746°	V		0.40	∡	126.746°	A
L	2→1	26.37000000	45.01	∡	36.746°	V		0.40	∡	-53.254°	A
C	1→4	0.00100000	0.12	∡	36.746°	V		0.01	∡	126.746°	A
L	4→0	16.40000000	0.04	∡	-143.254°	V		0.01	∡	126.746°	A
R	3→2	1.00000000	1.00	∡	0.000°	V		1.00	∡	0.000°	A

WCAP PART			FROM IMPEDANCE				TO IMPEDANCE			
R	5→0	36.22300000	36.22	+	j	1.360	0.00	+	j	0.000
C	5→0	0.00001600	0.00	-	j	14628.212	0.00	+	j	0.000
C	5→0	0.00002300	0.00	-	j	10176.147	0.00	+	j	0.000
L	2→5	6.04000000	36.24	+	j	26.947	36.24	+	j	1.141
L	2→0	3627.80000000	0.00	+	j	15500.015	0.00	+	j	0.000
C	2→1	0.00208000	0.00	-	j	112.733	0.00	-	j	0.208
L	2→1	26.37000000	0.00	+	j	112.876	0.00	+	j	0.208
C	1→4	0.00100000	0.00	-	j	163.981	-0.01	+	j	70.070
L	4→0	16.40000000	-0.01	+	j	70.070	0.00	+	j	0.000
R	**3→2**	1.00000000	37.13	+	j	26.978	**36.13**	+	**j**	**26.978**

Measured: 37.1 + j 26.9
(Difference: 0.970 0.078)

WCAP Tower Base Open Circuit "Self" Analysis – KFEQ Tower 4 (*West*) (Continued)

KFEQ T4 (W) Open Circuit – Self **WCAP OUTPUT AT FREQUENCY: 0.680 MHz**

WCAP PART **VSWR**

WCAP INPUT DATA:

	0.6800	0.00010000	1	
R	36.22300000	5	0	1.35960000
C	0.00001600	5	0	
C	0.00002300	5	0	
L	6.04000000	2	5	0.00000000
L	3627.80000000	2	0	0.00000000
C	0.00208000	2	1	
L	26.37000000	2	1	0.00000000
C	0.00100000	1	4	
L	16.40000000	4	0	0.00000000
R	1.00000000	3	2	0.00000000
I	1.00000000	0	3	0.00000000

WCAP Tower Base Open Circuit "Self" Analysis – KFEQ Tower 5 (KESJ T1 (NW))

KFEQ Tower 5 - Open Circuit – Self **WCAP OUTPUT AT FREQUENCY: 0.680 MHz**

NODE VOLTAGES

Node:	1	261.2052	∡	-88.4556°	V
Node:	2	261.1801	∡	-88.6749°	V
Node:	3	293.6615	∡	-88.8136°	V

WCAP PART			CURRENT IN BRANCH VOLTAGE				CURRENT OUT BRANCH CURRENT			
R	3→0	5.67560000	293.66	∡	-88.814°	V	1.03	∡	0.044°	A
C	3→0	0.00002000	293.66	∡	-88.814°	V	0.03	∡	1.186°	A
L	2→3	7.19600000	32.49	∡	90.071°	V	1.06	∡	0.071°	A
L	2→0	1078.10000000	261.18	∡	-88.675°	V	0.06	∡	-178.675°	A
R	1→2	1.00000000	1.00	∡	0.000°	V	1.00	∡	0.000°	A

WCAP PART			FROM IMPEDANCE				TO IMPEDANCE			
R	3→0	5.67560000	5.68	-	j	284.610	0.00	+	j	0.000
C	3→0	0.00002000	0.00	-	j	11702.569	0.00	+	j	0.000
L	2→3	7.19600000	5.41	-	j	247.110	5.41	-	j	277.855
L	2→0	1078.10000000	0.00	+	j	4606.253	0.00	+	j	0.000
R	**1→2**	1.00000000	7.04	-	j	261.110	**6.04**	**-**	**j**	**261.110**

Measured: 5.30 - j 261.1
(Difference: 0.74 0.01)

WCAP PART VSWR

WCAP INPUT DATA:

	0.6800	0.00010000	1	
R	5.67560000	3	0	-284.61000000
C	0.00002000	3	0	
L	7.19600000	2	3	0.00000000
L	1078.10000000	2	0	0.00000000
R	1.00000000	1	2	0.00000000
I	1.00000000	0	1	0.00000000

WCAP Tower Base Open Circuit "Self" Analysis – KFEQ Tower 6 (KESJ T2 (SE))

KFEQ Tower 6 - Open Circuit – Self **WCAP OUTPUT AT FREQUENCY: 0.680 MHz**

NODE VOLTAGES

Node:	1	260.8010	∡	-88.4556°	V
Node:	2	260.7760	∡	-88.6752°	V
Node:	3	293.6067	∡	-88.8155°	V

WCAP PART			CURRENT IN BRANCH VOLTAGE				CURRENT OUT BRANCH CURRENT			
R	3→0	5.66620000	293.61	∡	-88.815°	V	1.03	∡	0.044°	A
C	3→0	0.00002000	293.61	∡	-88.815°	V	0.03	∡	1.185°	A
L	2→3	7.27400000	32.84	∡	90.071°	V	1.06	∡	0.071°	A
L	2→0	1078.10000000	260.78	∡	-88.675°	V	0.06	∡	-178.675°	A
R	1→2	1.00000000	1.00	∡	0.000°	V	1.00	∡	0.000°	A

WCAP PART			FROM IMPEDANCE				TO IMPEDANCE			
R	3→0	5.66620000	5.67	-	j	284.580	0.00	+	j	0.000
C	3→0	0.00002000	0.00	-	j	11702.569	0.00	+	j	0.000
L	2→3	7.27400000	5.40	-	j	246.748	5.40	-	j	277.827
L	2→0	1078.10000000	0.00	+	j	4606.253	0.00	+	j	0.000
R	**1→2**	1.00000000	7.03	-	j	260.706	**6.03**	**-**	**j**	**260.706**

Measured:	**5.10**	**-**	**j**	**260.7**
(Difference:	0.93			0.006)

WCAP PART VSWR

WCAP INPUT DATA:

	0.6800	0.00010000	1	
R	5.66620000	3	0	-284.58000000
C	0.00002000	3	0	
L	7.27400000	2	3	0.00000000
L	1078.10000000	2	0	0.00000000
R	1.00000000	1	2	0.00000000
I	1.00000000	0	1	0.00000000

WCAP Tower Base Open Circuit "Self" Analysis – KFEQ Tower 7 (KESJ T3 (SW))

KFEQ Tower 7- Open Circuit – Self WCAP OUTPUT AT FREQUENCY: 0.680 MHz

NODE VOLTAGES

Node:	1	262.4060	∡	-88.4707°	V
Node:	2	262.3812	∡	-88.6890°	V
Node:	3	293.6426	∡	-88.8210°	V

WCAP PART CURRENT IN CURRENT OUT

WCAP PART			BRANCH VOLTAGE				BRANCH CURRENT			
R	3→0	5.63820000	293.64	∡	-88.821°	V	1.03	∡	0.044°	A
C	3→0	0.00002000	293.64	∡	-88.821°	V	0.03	∡	1.179°	A
L	2→3	6.92400000	31.27	∡	90.071°	V	1.06	∡	0.071°	A
L	2→0	1078.10000000	262.38	∡	-88.689°	V	0.06	∡	-178.689°	A
R	1→2	1.00000000	1.00	∡	0.000°	V	1.00	∡	0.000°	A

WCAP PART			FROM IMPEDANCE				TO IMPEDANCE			
R	3→0	5.63820000	5.64	-	j	284.520	0.00	+	j	0.000
C	3→0	0.00002000	0.00	-	j	11702.569	0.00	+	j	0.000
L	2→3	6.92400000	5.37	-	j	248.186	5.37	-	j	277.769
L	2→0	1078.10000000	0.00	+	j	4606.253	0.00	+	j	0.000
R	**1→2**	1.00000000	7.00	-	j	262.313	**6.00**	**-**	**j**	**262.313**

Measured: 5.39 - j 262.3
(Difference: 0.61 0.013)

WCAP PART VSWR

WCAP INPUT DATA:

	0.6800	0.00010000	1	
R	5.63820000	3	0	-284.52000000
C	0.00002000	3	0	
L	6.92400000	2	3	0.00000000
L	1078.10000000	2	0	0.00000000
R	1.00000000	1	2	0.00000000
I	1.00000000	0	1	0.00000000

WCAP Tower Base Open Circuit "Self" Analysis – KFEQ Tower 8 (KESJ T4 (NE))

KFEQ Tower 8- Open Circuit – Self **WCAP OUTPUT AT FREQUENCY: 0.680 MHz**

NODE VOLTAGES

Node:	1	262.8928	∡	-88.4924°	V
Node:	2	262.8684	∡	-88.7103°	V
Node:	3	295.4833	∡	-88.8450°	V

WCAP PART			CURRENT IN BRANCH VOLTAGE				CURRENT OUT BRANCH CURRENT			
R	3→0	5.55750000	295.48	∡	-88.845°	V	1.03	∡	0.043°	A
C	3→0	0.00002000	295.48	∡	-88.845°	V	0.03	∡	1.155°	A
L	2→3	7.22300000	32.62	∡	90.070°	V	1.06	∡	0.070°	A
L	2→0	1078.10000000	262.87	∡	-88.710°	V	0.06	∡	-178.710°	A
R	1→2	1.00000000	1.00	∡	0.000°	V	1.00	∡	0.000°	A

WCAP PART			FROM IMPEDANCE				TO IMPEDANCE			
R	3→0	5.55750000	5.56	-	j	286.320	0.00	+	j	0.000
C	3→0	0.00002000	0.00	-	j	11702.569	0.00	+	j	0.000
L	2→3	7.22300000	5.30	-	j	248.624	5.30	-	j	279.485
L	2→0	1078.10000000	0.00	+	j	4606.253	0.00	+	j	0.000
R	**1→2**	1.00000000	6.92	-	j	262.802	**5.92**	**-**	**j**	**262.802**

Measured: 4.21 - j 262.8
(Difference: 1.71 0.002)

WCAP PART VSWR

WCAP INPUT DATA:

	0.6800	0.00010000	1	
R	5.55750000	3	0	-286.32000000
C	0.00002000	3	0	
L	7.22300000	2	3	0.00000000
L	1078.10000000	2	0	0.00000000
R	1.00000000	1	2	0.00000000
I	1.00000000	0	1	0.00000000

Details of MoM "Open Circuit" Modeling - for Towers Driven Individually

In the underlying MoM modeling used in the preceding work, each tower is first considered individually. "Open Circuit" ("OC" or "Self") analysis calculations are made based upon the physical characteristics of the array. The modeled data is then "converged" with the "as-measured" data for each tower by applying corrections for velocity of propagation through the towers and assumed stray base reactances. For the analysis of this antenna array, "Expert MiniNEC Broadcast Professional" software (Version 14.5 –published by *EM Scientific Inc.*) was employed to develop the initial individual tower cases. Copies of program outputs are provided in the following pages to demonstrate the methods used and results achieved.

All of the antenna system radiators are identical, uniform cross-section, guyed *ERI* (Electronic Research Incorporated) towers. The KFEQ towers have larger face widths than the KESJ towers due to their size. However, given the relatively slender diameters of the involved towers (21 and 18 inch faces), the accepted practice of using a single "wire" approach to represent each tower was employed herein, as opposed to a lattice or wire-frame model. The top and bottom wire end points of each of the tower wires were specified in electrical degrees in the Cartesian coordinate system. No end caps were employed. A perfect ground environment was also assumed. The geometry data used in this analysis were taken from the corrected (licensed) theoretical directional antenna specifications for KFEQ and from the surveyed information for the collocated KESJ array, distances being translated into electrical degrees at 680 kHz.

The KFEQ towers are "physically" 82.13 electrical degrees high at 680 kHz. For the purposes of this analysis, they were modeled using 10 segments. As such, the segment length is 8.2 degrees, which satisfies the Commission's requirement under §73.151(c)(1)(iii) that no less than one segment be used for 10 electrical degrees of the tower's physical height. The physical heights of the KESJ towers is 39.47 degrees at 680 kHz. Given the shorter height, these towers were modeled using 5 segments, thus each segment length is 7.9 degrees, thus also satisfying the Commission's Method-of-Moments modeling criteria.

After the initial setup of antenna array information in the model, the individual towers were studied iteratively with all other towers open circuited[4], while tower wire characteristics were adjusted (in height and radius) until the modeled resistance approximately matched the measured resistance. Final adjustments to converge the model reactances with the measured reactances were made through the introduction of the WCAP circuit model, shown in the preceding pages, which allowed an approximation of the series stray reactances found in the tower base environment.

Each tower's adjusted modeled height relative to its physical height falls within the required range of 75 to 125 percent. Each modeled tower radius fell within the required range of 80 percent to 150 percent of the radius of a circle having a circumference equal to the sum of the widths of the tower sides. A summary of this portion of the model input data is provided below:

Tower	Radiator Physical Height (at 680 kHz)	Modeled Height	Modeled % of Height	Radiator Physical Equivalent Radius (meters)	Modeled Radius	Modeled % of Radius
1– East	82.13°	86.8°	105.7%	0.231	0.231 m	100.0%
2 – East Central	82.13°	89.9°	109.5%	0.231	0.205 m	88.7%
3 – West Central	82.13°	90.2°	109.8%	0.231	0.250 m	108.2%
4 – West	82.13°	87.0°	105.9%	0.231	0.205 m	88.7%
5 (KESJ #1 - NW)	39.47°	43.5°	110.2%	0.198	0.198 m	100.0%
6 (KESJ #2 - SE)	39.47°	43.5°	110.2%	0.198	0.198 m	100.0%
7 (KESJ #3 - SW)	39.47°	43.5°	110.2%	0.198	0.198 m	100.0%
8 (KESJ #4 - NE)	39.47°	43.3°	109.7%	0.198	0.198 m	100.0%

The preceding WCAP tabulations detailed the base circuit analysis; the following tabulations show the details of the MoM OC models for the individually driven towers.

[4] The MoM model incorporated assumed loads at ground level for the "other" open circuited towers in the array using the stray shunt reactance data that were calculated using the base circuit models for the open circuited towers. The overall circuit model consists of series and parallel branches representing feedline inductances, shunt inductances (such as static drain chokes), and stray capacitances, such as base insulator capacitance to ground. For the initial lumped load assumptions, only shunt reactances were considered. Series feedline stray reactances are added in the final convergence step.

MoM Model Details for Towers Driven Individually – KFEQ Tower 1 - OC Self - (1 of 3)

GEOMETRY: Wire coordinates in degrees; other dimensions in meters
Environment: perfect ground

wire	caps	Distance	Angle	Z	radius	segs
1	none	0	0	0	.231	10
		0	0	86.8		
2	none	95.	273.	0	.205	10
		95.	273.	89.9		
3	none	190.	273.	0	.25	10
		190.	273.	90.2		
4	none	380.	273.	0	.205	10
		380.	273.	87.		
5	none	309.65	273.4	0	.198	5
		309.65	273.4	43.5		
6	none	261.72	268.7	0	.198	5
		261.72	268.7	43.5		
7	none	303.27	265.3	0	.198	5
		303.27	265.3	43.5		
8	none	273.41	277.4	0	.198	5
		273.41	277.4	43.3		

Number of wires = 8 current nodes = 60

Individual wires	minimum wire	minimum value	maximum wire	maximum value
segment length	8	8.66	3	9.02
radius	5	.198	3	.25

ELECTRICAL DESCRIPTION: Frequencies (MHz)

no.	frequency lowest	step	no. of steps	segment length (wavelengths) minimum	maximum
1	.68	0	1	.0240556	.0250556

Sources:

source	node	sector	magnitude	phase	type
1	1	1	1.	0	voltage

Lumped loads:

load	node	resistance (ohms)	reactance (ohms)	inductance (mH)	capacitance (uF)	passive circuit
1	1	0	0	0	0	0
2	11	0	-9,792.9	0	0	0
3	21	0	-9,792.9	0	0	0
4	31	0	-9,792.9	0	0	0
5	41	0	7,594.9	0	0	0
6	46	0	7,594.9	0	0	0
7	51	0	7,594.9	0	0	0
8	56	0	7,594.9	0	0	0

IMPEDANCE: normalization = 50. **source** = 1; node 1, sector 1

freq (MHz)	resist (ohms)	react (ohms)	imped (ohms)	phase (deg)	VSWR	S11 dB	S12 dB
.68	35.589	.55324	35.594	.9	1.4053	-15.468	-.12508

MoM Model Details for Towers Driven Individually – KFEQ Tower 1 - OC Self - (2 of 3)

CURRENT rms Frequency = .68 MHz Input power = .0140458 watts
Efficiency = 100. % coordinates in degrees

current no.	X	Y	Z	mag (amps)	phase (deg)	real (amps)	imaginary (amps)
GND	0	0	0	.0198662	359.1	.0198638	-3.09E-04
2	0	0	8.68	.0196552	357.7	.0196399	-7.76E-04
3	0	0	17.36	.019002	356.8	.0189726	-1.06E-03
4	0	0	26.04	.017917	356.1	.0178746	-1.23E-03
5	0	0	34.72	.0164193	355.4	.0163666	-1.31E-03
6	0	0	43.4	.0145348	354.8	.0144758	-1.31E-03
7	0	0	52.08	.0122953	354.3	.0122349	-1.22E-03
8	0	0	60.76	9.73E-03	353.8	9.68E-03	-1.04E-03
9	0	0	69.44	6.88E-03	353.4	6.83E-03	-7.91E-04
10	0	0	78.12	3.73E-03	353.	3.7E-03	-4.56E-04
END	0	0	86.8	0	0	0	0
GND	4.97193	94.8698	0	4.99E-05	224.7	-3.55E-05	-3.51E-05
12	4.97193	94.8698	8.99	3.72E-04	224.8	-2.64E-04	-2.62E-04
13	4.97193	94.8698	17.98	5.7E-04	225.	-4.03E-04	-4.03E-04
14	4.97193	94.8698	26.97	6.98E-04	225.2	-4.92E-04	-4.95E-04
15	4.97193	94.8698	35.96	7.64E-04	225.4	-5.36E-04	-5.43E-04
16	4.97193	94.8698	44.95	7.71E-04	225.6	-5.39E-04	-5.51E-04
17	4.97193	94.8698	53.94	7.23E-04	225.9	-5.03E-04	-5.19E-04
18	4.97193	94.8698	62.93	6.22E-04	226.1	-4.31E-04	-4.48E-04
19	4.97193	94.8698	71.92	4.71E-04	226.4	-3.25E-04	-3.41E-04
20	4.97193	94.8698	80.91	2.7E-04	226.6	-1.86E-04	-1.97E-04
END	4.97193	94.8698	89.9	0	0	0	0
GND	9.94386	189.74	0	3.48E-05	137.4	-2.57E-05	2.36E-05
22	9.94386	189.74	9.02	2.74E-04	137.3	-2.01E-04	1.85E-04
23	9.94386	189.74	18.04	4.2E-04	137.2	-3.08E-04	2.85E-04
24	9.94386	189.74	27.06	5.15E-04	137.	-3.77E-04	3.51E-04
25	9.94386	189.74	36.08	5.66E-04	136.8	-4.13E-04	3.87E-04
26	9.94386	189.74	45.1	5.74E-04	136.6	-4.17E-04	3.94E-04
27	9.94386	189.74	54.12	5.41E-04	136.4	-3.92E-04	3.73E-04
28	9.94386	189.74	63.14	4.69E-04	136.1	-3.38E-04	3.25E-04
29	9.94386	189.74	72.16	3.58E-04	135.9	-2.57E-04	2.49E-04
30	9.94386	189.74	81.18	2.07E-04	135.6	-1.48E-04	1.45E-04
END	9.94386	189.74	90.2	0	0	0	0
GND	19.8877	379.479	0	1.9E-05	316.1	1.37E-05	-1.32E-05
32	19.8877	379.479	8.7	1.39E-04	316.	1.E-04	-9.69E-05
33	19.8877	379.479	17.4	2.14E-04	315.9	1.54E-04	-1.49E-04
34	19.8877	379.479	26.1	2.64E-04	315.8	1.89E-04	-1.84E-04
35	19.8877	379.479	34.8	2.91E-04	315.7	2.08E-04	-2.03E-04
36	19.8877	379.479	43.5	2.96E-04	315.5	2.11E-04	-2.08E-04
37	19.8877	379.479	52.2	2.8E-04	315.3	1.99E-04	-1.97E-04
38	19.8877	379.479	60.9	2.44E-04	315.1	1.73E-04	-1.72E-04
39	19.8877	379.479	69.6	1.87E-04	314.9	1.32E-04	-1.32E-04
40	19.8877	379.479	78.3	1.09E-04	314.7	7.65E-05	-7.74E-05
END	19.8877	379.479	87.	0	0	0	0

MoM Model Details for Towers Driven Individually – KFEQ Tower 1 - OC Self - (3 of 3)

current no.	X	Y	Z	mag (amps)	phase (deg)	real (amps)	imaginary (amps)
GND	18.3642	309.105	0	1.17E-05	207.3	-1.04E-05	-5.37E-06
42	18.3642	309.105	8.7	4.07E-05	27.3	3.61E-05	1.86E-05
43	18.3642	309.105	17.4	6.27E-05	27.2	5.57E-05	2.86E-05
44	18.3642	309.105	26.1	6.37E-05	27.1	5.67E-05	2.9E-05
45	18.3642	309.105	34.8	4.45E-05	27.	3.96E-05	2.02E-05
END	18.3642	309.105	43.5	0	0	0	0
GND	-5.93764	261.653	0	1.39E-05	254.6	-3.7E-06	-1.34E-05
47	-5.93764	261.653	8.7	4.85E-05	74.5	1.3E-05	4.68E-05
48	-5.93764	261.653	17.4	7.47E-05	74.4	2.01E-05	7.2E-05
49	-5.93764	261.653	26.1	7.59E-05	74.2	2.07E-05	7.3E-05
50	-5.93764	261.653	34.8	5.29E-05	73.9	1.46E-05	5.08E-05
END	-5.93764	261.653	43.5	0	0	0	0
GND	-24.8495	302.25	0	1.19E-05	214.1	-9.85E-06	-6.68E-06
52	-24.8495	302.25	8.7	4.14E-05	34.	3.43E-05	2.32E-05
53	-24.8495	302.25	17.4	6.39E-05	33.9	5.3E-05	3.57E-05
54	-24.8495	302.25	26.1	6.5E-05	33.8	5.4E-05	3.62E-05
55	-24.8495	302.25	34.8	4.53E-05	33.7	3.77E-05	2.51E-05
END	-24.8495	302.25	43.5	0	0	0	0
GND	35.214	271.133	0	1.32E-05	243.5	-5.9E-06	-1.18E-05
57	35.214	271.133	8.66	4.58E-05	63.4	2.05E-05	4.1E-05
58	35.214	271.133	17.32	7.06E-05	63.3	3.17E-05	6.31E-05
59	35.214	271.133	25.98	7.18E-05	63.1	3.25E-05	6.4E-05
60	35.214	271.133	34.64	5.01E-05	62.9	2.28E-05	4.46E-05
END	35.214	271.133	43.3	0	0	0	0

MoM Model Details for Towers Driven Individually - Tower 2 - OC Self - (1 of 3)

GEOMETRY: Wire coordinates in degrees; other dimensions in meters
Environment: perfect ground

wire	caps	Distance	Angle	Z	radius	segs
1	none	0	0	0	.231	10
		0	0	86.8		
2	none	95.	273.	0	.205	10
		95.	273.	89.9		
3	none	190.	273.	0	.25	10
		190.	273.	90.2		
4	none	380.	273.	0	.205	10
		380.	273.	87.		
5	none	309.65	273.4	0	.198	5
		309.65	273.4	43.5		
6	none	261.72	268.7	0	.198	5
		261.72	268.7	43.5		
7	none	303.27	265.3	0	.198	5
		303.27	265.3	43.5		
8	none	273.41	277.4	0	.198	5
		273.41	277.4	43.3		

Number of wires = 8 current nodes = 60

Individual wires	minimum wire	minimum value	maximum wire	maximum value
segment length	8	8.66	3	9.02
radius	5	.198	3	.25

ELECTRICAL DESCRIPTION: Frequencies (MHz)

no.	frequency lowest	step	no. of steps	segment length (wavelengths) minimum	maximum
1	.68	0	1	.0240556	.0250556

Sources:

source	node	sector	magnitude	phase	type
1	11	1	1.	0	voltage

Lumped loads:

load	node	resistance (ohms)	reactance (ohms)	inductance (mH)	capacitance (uF)	passive circuit
1	1	0	-9,792.9	0	0	0
2	11	0	0	0	0	0
3	21	0	-9,792.9	0	0	0
4	31	0	-9,792.9	0	0	0
5	41	0	7,594.9	0	0	0
6	46	0	7,594.9	0	0	0
7	51	0	7,594.9	0	0	0
8	56	0	7,594.9	0	0	0

IMPEDANCE: normalization = 50. source = 1; node 11, sector 1

freq (MHz)	resist (ohms)	react (ohms)	imped (ohms)	phase (deg)	VSWR	S11 dB	S12 dB
.68	38.055	18.251	42.206	25.6	1.6405	-12.304	-.26334

MoM Model Details for Towers Driven Individually - Tower 2 - OC Self - (2 of 3)

CURRENT rms Frequency = .68 MHz Input power = .0106818 watts
Efficiency = 100. % coordinates in degrees

current no.	X	Y	Z	mag (amps)	phase (deg)	real (amps)	imaginary (amps)
GND	0	0	0	4.2E-05	200.	-3.95E-05	-1.44E-05
2	0	0	8.68	3.15E-04	200.1	-2.96E-04	-1.08E-04
3	0	0	17.36	4.81E-04	200.2	-4.51E-04	-1.66E-04
4	0	0	26.04	5.88E-04	200.4	-5.51E-04	-2.05E-04
5	0	0	34.72	6.43E-04	200.5	-6.02E-04	-2.26E-04
6	0	0	43.4	6.49E-04	200.8	-6.07E-04	-2.3E-04
7	0	0	52.08	6.09E-04	201.	-5.69E-04	-2.18E-04
8	0	0	60.76	5.25E-04	201.2	-4.9E-04	-1.9E-04
9	0	0	69.44	3.99E-04	201.4	-3.71E-04	-1.46E-04
10	0	0	78.12	2.3E-04	201.7	-2.14E-04	-8.51E-05
END	0	0	86.8	0	0	0	0
GND	4.97193	94.8698	0	.0167539	334.4	.0151064	-7.25E-03
12	4.97193	94.8698	8.99	.0167699	332.9	.0149334	-7.63E-03
13	4.97193	94.8698	17.98	.0163339	332.	.0144181	-7.68E-03
14	4.97193	94.8698	26.97	.0154883	331.2	.0135712	-7.46E-03
15	4.97193	94.8698	35.96	.0142547	330.5	.0124097	-7.01E-03
16	4.97193	94.8698	44.95	.0126595	329.9	.0109569	-6.34E-03
17	4.97193	94.8698	53.94	.0107329	329.4	9.24E-03	-5.46E-03
18	4.97193	94.8698	62.93	8.51E-03	328.9	7.29E-03	-4.39E-03
19	4.97193	94.8698	71.92	6.01E-03	328.5	5.13E-03	-3.14E-03
20	4.97193	94.8698	80.91	3.25E-03	328.1	2.76E-03	-1.72E-03
END	4.97193	94.8698	89.9	0	0	0	0
GND	9.94386	189.74	0	4.52E-05	199.2	-4.27E-05	-1.49E-05
22	9.94386	189.74	9.02	3.54E-04	199.3	-3.34E-04	-1.17E-04
23	9.94386	189.74	18.04	5.42E-04	199.4	-5.11E-04	-1.8E-04
24	9.94386	189.74	27.06	6.62E-04	199.5	-6.24E-04	-2.22E-04
25	9.94386	189.74	36.08	7.25E-04	199.7	-6.82E-04	-2.44E-04
26	9.94386	189.74	45.1	7.32E-04	199.9	-6.88E-04	-2.49E-04
27	9.94386	189.74	54.12	6.86E-04	200.1	-6.44E-04	-2.36E-04
28	9.94386	189.74	63.14	5.91E-04	200.3	-5.54E-04	-2.05E-04
29	9.94386	189.74	72.16	4.48E-04	200.6	-4.2E-04	-1.57E-04
30	9.94386	189.74	81.18	2.58E-04	200.8	-2.41E-04	-9.16E-05
END	9.94386	189.74	90.2	0	0	0	0
GND	19.8877	379.479	0	2.07E-05	24.9	1.88E-05	8.73E-06
32	19.8877	379.479	8.7	1.52E-04	24.8	1.38E-04	6.38E-05
33	19.8877	379.479	17.4	2.33E-04	24.7	2.12E-04	9.75E-05
34	19.8877	379.479	26.1	2.87E-04	24.6	2.61E-04	1.19E-04
35	19.8877	379.479	34.8	3.16E-04	24.4	2.87E-04	1.31E-04
36	19.8877	379.479	43.5	3.21E-04	24.2	2.93E-04	1.32E-04
37	19.8877	379.479	52.2	3.04E-04	24.	2.77E-04	1.24E-04
38	19.8877	379.479	60.9	2.64E-04	23.8	2.41E-04	1.06E-04
39	19.8877	379.479	69.6	2.02E-04	23.5	1.85E-04	8.06E-05
40	19.8877	379.479	78.3	1.17E-04	23.3	1.08E-04	4.63E-05
END	19.8877	379.479	87.	0	0	0	0

MoM Model Details for Towers Driven Individually - Tower 2 - OC Self - (3 of 3)

current no.	X	Y	Z	mag (amps)	phase (deg)	real (amps)	imaginary (amps)
GND	18.3642	309.105	0	1.35E-05	274.7	1.1E-06	-1.35E-05
42	18.3642	309.105	8.7	4.71E-05	94.6	-3.78E-06	4.69E-05
43	18.3642	309.105	17.4	7.25E-05	94.5	-5.7E-06	7.22E-05
44	18.3642	309.105	26.1	7.36E-05	94.4	-5.65E-06	7.34E-05
45	18.3642	309.105	34.8	5.13E-05	94.3	-3.82E-06	5.11E-05
END	18.3642	309.105	43.5	0	0	0	0
GND	-5.93764	261.653	0	1.69E-05	319.5	1.29E-05	-1.1E-05
47	-5.93764	261.653	8.7	5.87E-05	139.5	-4.46E-05	3.82E-05
48	-5.93764	261.653	17.4	9.03E-05	139.3	-6.85E-05	5.88E-05
49	-5.93764	261.653	26.1	9.16E-05	139.2	-6.93E-05	5.98E-05
50	-5.93764	261.653	34.8	6.36E-05	139.	-4.8E-05	4.18E-05
END	-5.93764	261.653	43.5	0	0	0	0
GND	-24.8495	302.25	0	1.38E-05	280.1	2.42E-06	-1.36E-05
52	-24.8495	302.25	8.7	4.81E-05	100.	-8.35E-06	4.73E-05
53	-24.8495	302.25	17.4	7.4E-05	99.9	-1.27E-05	7.29E-05
54	-24.8495	302.25	26.1	7.51E-05	99.8	-1.27E-05	7.4E-05
55	-24.8495	302.25	34.8	5.23E-05	99.6	-8.74E-06	5.16E-05
END	-24.8495	302.25	43.5	0	0	0	0
GND	35.214	271.133	0	1.58E-05	309.	9.97E-06	-1.23E-05
57	35.214	271.133	8.66	5.48E-05	128.9	-3.44E-05	4.27E-05
58	35.214	271.133	17.32	8.44E-05	128.8	-5.29E-05	6.57E-05
59	35.214	271.133	25.98	8.56E-05	128.7	-5.35E-05	6.68E-05
60	35.214	271.133	34.64	5.95E-05	128.5	-3.7E-05	4.66E-05
END	35.214	271.133	43.3	0	0	0	0

MoM Model Details for Towers Driven Individually - Tower 3 - OC Self - (1 of 3)

GEOMETRY Wire coordinates in degrees; other dimensions in meters
Environment: perfect ground

wire	caps	Distance	Angle	Z	radius	segs
1	none	0	0	0	.231	10
		0	0	86.8		
2	none	95.	273.	0	.205	10
		95.	273.	89.9		
3	none	190.	273.	0	.25	10
		190.	273.	90.2		
4	none	380.	273.	0	.205	10
		380.	273.	87.		
5	none	309.65	273.4	0	.198	5
		309.65	273.4	43.5		
6	none	261.72	268.7	0	.198	5
		261.72	268.7	43.5		
7	none	303.27	265.3	0	.198	5
		303.27	265.3	43.5		
8	none	273.41	277.4	0	.198	5
		273.41	277.4	43.3		

Number of wires = 8 current nodes = 60

	minimum wire	minimum value	maximum wire	maximum value
Individual wires				
segment length	8	8.66	3	9.02
radius	5	.198	3	.25

ELECTRICAL DESCRIPTION: Frequencies (MHz)

no.	frequency lowest	step	no. of steps	segment length (wavelengths) minimum	maximum
1	.68	0	1	.0240556	.0250556

Sources:

source	node	sector	magnitude	phase	type
1	21	1	1.	0	voltage

Lumped loads:

load	node	resistance (ohms)	reactance (ohms)	inductance (mH)	capacitance (uF)	passive circuit
1	1	0	-9,792.9	0	0	0
2	11	0	-9,792.9	0	0	0
3	21	0	0	0	0	0
4	31	0	-9,792.9	0	0	0
5	41	0	7,594.9	0	0	0
6	46	0	7,594.9	0	0	0
7	51	0	7,594.9	0	0	0
8	56	0	7,594.9	0	0	0

IMPEDANCE: normalization = 50. source = 1; node 21, sector 1

freq (MHz)	resist (ohms)	react (ohms)	imped (ohms)	phase (deg)	VSWR	S11 dB	S12 dB
.68	40.391	20.308	45.209	26.7	1.6403	-12.306	-.26322

MoM Model Details for Towers Driven Individually - Tower 3 - OC Self - (2 of 3)

CURRENT rms Frequency = .68 MHz Input power = .00988117 watts
Efficiency = 100. % coordinates in degrees

current no.	X	Y	Z	mag (amps)	phase (deg)	real (amps)	imaginary (amps)
GND	0	0	0	2.74E-05	111.6	-1.01E-05	2.55E-05
2	0	0	8.68	2.06E-04	111.6	-7.56E-05	1.91E-04
3	0	0	17.36	3.15E-04	111.4	-1.15E-04	2.93E-04
4	0	0	26.04	3.86E-04	111.3	-1.4E-04	3.6E-04
5	0	0	34.72	4.24E-04	111.1	-1.53E-04	3.96E-04
6	0	0	43.4	4.31E-04	110.9	-1.54E-04	4.02E-04
7	0	0	52.08	4.06E-04	110.7	-1.44E-04	3.8E-04
8	0	0	60.76	3.52E-04	110.5	-1.23E-04	3.3E-04
9	0	0	69.44	2.69E-04	110.2	-9.3E-05	2.52E-04
10	0	0	78.12	1.56E-04	110.	-5.33E-05	1.47E-04
END	0	0	86.8	0	0	0	0
GND	4.97193	94.8698	0	4.22E-05	198.1	-4.01E-05	-1.31E-05
12	4.97193	94.8698	8.99	3.15E-04	198.2	-2.99E-04	-9.84E-05
13	4.97193	94.8698	17.98	4.82E-04	198.3	-4.58E-04	-1.52E-04
14	4.97193	94.8698	26.97	5.91E-04	198.5	-5.6E-04	-1.87E-04
15	4.97193	94.8698	35.96	6.47E-04	198.7	-6.13E-04	-2.07E-04
16	4.97193	94.8698	44.95	6.53E-04	198.9	-6.18E-04	-2.11E-04
17	4.97193	94.8698	53.94	6.12E-04	199.1	-5.79E-04	-2.E-04
18	4.97193	94.8698	62.93	5.27E-04	199.3	-4.98E-04	-1.74E-04
19	4.97193	94.8698	71.92	3.99E-04	199.5	-3.77E-04	-1.33E-04
20	4.97193	94.8698	80.91	2.3E-04	199.7	-2.16E-04	-7.75E-05
END	4.97193	94.8698	89.9	0	0	0	0
GND	9.94386	189.74	0	.0156409	333.3	.0139741	-7.03E-03
22	9.94386	189.74	9.02	.0156909	331.7	.0138143	-7.44E-03
23	9.94386	189.74	18.04	.0153057	330.6	.0133382	-7.51E-03
24	9.94386	189.74	27.06	.0145318	329.8	.0125557	-7.32E-03
25	9.94386	189.74	36.08	.0133903	329.	.0114829	-6.89E-03
26	9.94386	189.74	45.1	.0119055	328.4	.0101408	-6.24E-03
27	9.94386	189.74	54.12	.010106	327.8	8.55E-03	-5.38E-03
28	9.94386	189.74	63.14	8.02E-03	327.3	6.75E-03	-4.33E-03
29	9.94386	189.74	72.16	5.68E-03	326.8	4.76E-03	-3.11E-03
30	9.94386	189.74	81.18	3.08E-03	326.4	2.57E-03	-1.71E-03
END	9.94386	189.74	90.2	0	0	0	0
GND	19.8877	379.479	0	2.62E-05	114.	-1.07E-05	2.4E-05
32	19.8877	379.479	8.7	1.92E-04	113.9	-7.77E-05	1.75E-04
33	19.8877	379.479	17.4	2.94E-04	113.8	-1.19E-04	2.69E-04
34	19.8877	379.479	26.1	3.61E-04	113.7	-1.45E-04	3.31E-04
35	19.8877	379.479	34.8	3.97E-04	113.5	-1.58E-04	3.64E-04
36	19.8877	379.479	43.5	4.03E-04	113.3	-1.59E-04	3.7E-04
37	19.8877	379.479	52.2	3.8E-04	113.1	-1.49E-04	3.49E-04
38	19.8877	379.479	60.9	3.29E-04	112.9	-1.28E-04	3.03E-04
39	19.8877	379.479	69.6	2.51E-04	112.7	-9.67E-05	2.32E-04
40	19.8877	379.479	78.3	1.45E-04	112.4	-5.54E-05	1.34E-04
END	19.8877	379.479	87.	0	0	0	0

MoM Model Details for Towers Driven Individually - Tower 3 - OC Self - (3 of 3)

current no.	X	Y	Z	mag (amps)	phase (deg)	real (amps)	imaginary (amps)
GND	18.3642	309.105	0	1.9E-05	359.	1.9E-05	-3.27E-07
42	18.3642	309.105	8.7	6.59E-05	179.	-6.59E-05	1.11E-06
43	18.3642	309.105	17.4	1.01E-04	179.1	-1.01E-04	1.65E-06
44	18.3642	309.105	26.1	1.02E-04	179.1	-1.02E-04	1.58E-06
45	18.3642	309.105	34.8	7.11E-05	179.2	-7.11E-05	1.02E-06
END	18.3642	309.105	43.5	0	0	0	0
GND	-5.93764	261.653	0	2.49E-05	36.	2.02E-05	1.46E-05
47	-5.93764	261.653	8.7	8.64E-05	216.2	-6.97E-05	-5.1E-05
48	-5.93764	261.653	17.4	1.33E-04	216.4	-1.07E-04	-7.87E-05
49	-5.93764	261.653	26.1	1.34E-04	216.8	-1.07E-04	-8.02E-05
50	-5.93764	261.653	34.8	9.28E-05	217.2	-7.39E-05	-5.61E-05
END	-5.93764	261.653	43.5	0	0	0	0
GND	-24.8495	302.25	0	1.92E-05	1.2	1.92E-05	3.99E-07
52	-24.8495	302.25	8.7	6.67E-05	181.2	-6.67E-05	-1.41E-06
53	-24.8495	302.25	17.4	1.03E-04	181.2	-1.02E-04	-2.21E-06
54	-24.8495	302.25	26.1	1.04E-04	181.3	-1.04E-04	-2.3E-06
55	-24.8495	302.25	34.8	7.2E-05	181.3	-7.2E-05	-1.66E-06
END	-24.8495	302.25	43.5	0	0	0	0
GND	35.214	271.133	0	2.31E-05	27.5	2.05E-05	1.07E-05
57	35.214	271.133	8.66	7.97E-05	207.7	-7.06E-05	-3.7E-05
58	35.214	271.133	17.32	1.22E-04	207.9	-1.08E-04	-5.72E-05
59	35.214	271.133	25.98	1.24E-04	208.1	-1.09E-04	-5.83E-05
60	35.214	271.133	34.64	8.57E-05	208.4	-7.54E-05	-4.08E-05
END	35.214	271.133	43.3	0	0	0	0

MoM Model Details for Towers Driven Individually - Tower 4 - OC Self - (1 of 3)

GEOMETRY: Wire coordinates in degrees; other dimensions in meters
Environment: perfect ground

wire	caps	Distance	Angle	Z	radius	segs
1	none	0	0	0	.231	10
		0	0	86.8		
2	none	95.	273.	0	.205	10
		95.	273.	89.9		
3	none	190.	273.	0	.25	10
		190.	273.	90.2		
4	none	380.	273.	0	.205	10
		380.	273.	87.		
5	none	309.65	273.4	0	.198	5
		309.65	273.4	43.5		
6	none	261.72	268.7	0	.198	5
		261.72	268.7	43.5		
7	none	303.27	265.3	0	.198	5
		303.27	265.3	43.5		
8	none	273.41	277.4	0	.198	5
		273.41	277.4	43.3		

Number of wires = 8 current nodes = 60

	minimum wire	minimum value	maximum wire	maximum value
Individual wires				
segment length	8	8.66	3	9.02
radius	5	.198	3	.25

ELECTRICAL DESCRIPTION: Frequencies (MHz)

no.	frequency lowest	step	no. of steps	segment length (wavelengths) minimum	maximum
1	.68	0	1	.0240556	.0250556

Sources:

source	node	sector	magnitude	phase	type
1	31	1	1.	0	voltage

Lumped loads:

load	node	resistance (ohms)	reactance (ohms)	inductance (mH)	capacitance (uF)	passive circuit
1	1	0	-9,792.9	0	0	0
2	11	0	-9,792.9	0	0	0
3	21	0	-9,729.9	0	0	0
4	31	0	0	0	0	0
5	41	0	7,594.9	0	0	0
6	46	0	7,594.9	0	0	0
7	51	0	7,594.9	0	0	0
8	56	0	7,594.9	0	0	0

IMPEDANCE: normalization = 50. source = 1; node 31, sector 1

freq (MHz)	resist (ohms)	react (ohms)	imped (ohms)	phase (deg)	VSWR	S11 dB	S12 dB
.68	36.223	1.3596	36.249	2.1	1.3825	-15.889	-.11339

MoM Model Details for Towers Driven Individually - Tower 4 - OC Self - (2 of 3)

CURRENT rms Frequency = .68 MHz Input power = .0137839 watts
Efficiency = 100. % coordinates in degrees

current no.	X	Y	Z	mag (amps)	phase (deg)	real (amps)	imaginary (amps)
GND	0	0	0	1.87E-05	314.8	1.32E-05	-1.33E-05
2	0	0	8.68	1.41E-04	314.8	9.9E-05	-9.99E-05
3	0	0	17.36	2.16E-04	314.6	1.52E-04	-1.54E-04
4	0	0	26.04	2.65E-04	314.5	1.86E-04	-1.89E-04
5	0	0	34.72	2.92E-04	314.4	2.04E-04	-2.09E-04
6	0	0	43.4	2.98E-04	314.2	2.08E-04	-2.13E-04
7	0	0	52.08	2.82E-04	314.	1.96E-04	-2.03E-04
8	0	0	60.76	2.45E-04	313.8	1.7E-04	-1.77E-04
9	0	0	69.44	1.88E-04	313.6	1.3E-04	-1.36E-04
10	0	0	78.12	1.1E-04	313.4	7.53E-05	-7.97E-05
END	0	0	86.8	0	0	0	0
GND	4.97193	94.8698	0	2.42E-05	48.4	1.61E-05	1.81E-05
12	4.97193	94.8698	8.99	1.81E-04	48.3	1.2E-04	1.35E-04
13	4.97193	94.8698	17.98	2.78E-04	48.1	1.86E-04	2.07E-04
14	4.97193	94.8698	26.97	3.43E-04	48.	2.3E-04	2.55E-04
15	4.97193	94.8698	35.96	3.78E-04	47.8	2.54E-04	2.8E-04
16	4.97193	94.8698	44.95	3.84E-04	47.6	2.59E-04	2.84E-04
17	4.97193	94.8698	53.94	3.63E-04	47.3	2.46E-04	2.67E-04
18	4.97193	94.8698	62.93	3.15E-04	47.1	2.15E-04	2.31E-04
19	4.97193	94.8698	71.92	2.41E-04	46.8	1.65E-04	1.76E-04
20	4.97193	94.8698	80.91	1.4E-04	46.5	9.64E-05	1.02E-04
END	4.97193	94.8698	89.9	0	0	0	0
GND	9.94386	189.74	0	3.3E-05	138.5	-2.47E-05	2.19E-05
22	9.94386	189.74	9.02	2.57E-04	138.4	-1.92E-04	1.71E-04
23	9.94386	189.74	18.04	3.95E-04	138.3	-2.95E-04	2.63E-04
24	9.94386	189.74	27.06	4.84E-04	138.1	-3.61E-04	3.23E-04
25	9.94386	189.74	36.08	5.32E-04	138.	-3.95E-04	3.56E-04
26	9.94386	189.74	45.1	5.4E-04	137.8	-4.E-04	3.63E-04
27	9.94386	189.74	54.12	5.09E-04	137.6	-3.75E-04	3.43E-04
28	9.94386	189.74	63.14	4.41E-04	137.3	-3.24E-04	2.99E-04
29	9.94386	189.74	72.16	3.36E-04	137.	-2.46E-04	2.29E-04
30	9.94386	189.74	81.18	1.95E-04	136.7	-1.42E-04	1.34E-04
END	9.94386	189.74	90.2	0	0	0	0
GND	19.8877	379.479	0	.019507	357.9	.0194933	-7.32E-04
32	19.8877	379.479	8.7	.0193092	356.5	.019273	-1.18E-03
33	19.8877	379.479	17.4	.018672	355.6	.0186164	-1.44E-03
34	19.8877	379.479	26.1	.0176078	354.8	.017536	-1.59E-03
35	19.8877	379.479	34.8	.0161358	354.2	.0160525	-1.64E-03
36	19.8877	379.479	43.5	.0142819	353.6	.0141931	-1.59E-03
37	19.8877	379.479	52.2	.0120778	353.1	.0119901	-1.45E-03
38	19.8877	379.479	60.9	9.56E-03	352.6	9.48E-03	-1.23E-03
39	19.8877	379.479	69.6	6.75E-03	352.2	6.68E-03	-9.18E-04
40	19.8877	379.479	78.3	3.65E-03	351.8	3.61E-03	-5.23E-04
END	19.8877	379.479	87.	0	0	0	0

MoM Model Details for Towers Driven Individually - Tower 4 - OC Self - (3 of 3)

current no.	X	Y	Z	mag (amps)	phase (deg)	real (amps)	imaginary (amps)
GND	18.3642	309.105	0	3.03E-05	61.8	1.43E-05	2.67E-05
42	18.3642	309.105	8.7	1.05E-04	242.1	-4.92E-05	-9.29E-05
43	18.3642	309.105	17.4	1.61E-04	242.4	-7.46E-05	-1.43E-04
44	18.3642	309.105	26.1	1.63E-04	242.9	-7.42E-05	-1.45E-04
45	18.3642	309.105	34.8	1.13E-04	243.5	-5.04E-05	-1.01E-04
END	18.3642	309.105	43.5	0	0	0	0
GND	-5.93764	261.653	0	2.26E-05	22.8	2.08E-05	8.76E-06
47	-5.93764	261.653	8.7	7.84E-05	202.8	-7.22E-05	-3.04E-05
48	-5.93764	261.653	17.4	1.2E-04	202.9	-1.11E-04	-4.68E-05
49	-5.93764	261.653	26.1	1.22E-04	202.9	-1.12E-04	-4.74E-05
50	-5.93764	261.653	34.8	8.45E-05	203.	-7.78E-05	-3.3E-05
END	-5.93764	261.653	43.5	0	0	0	0
GND	-24.8495	302.25	0	2.72E-05	48.6	1.8E-05	2.04E-05
52	-24.8495	302.25	8.7	9.42E-05	228.7	-6.21E-05	-7.08E-05
53	-24.8495	302.25	17.4	1.45E-04	228.9	-9.5E-05	-1.09E-04
54	-24.8495	302.25	26.1	1.46E-04	229.2	-9.55E-05	-1.11E-04
55	-24.8495	302.25	34.8	1.01E-04	229.5	-6.57E-05	-7.69E-05
END	-24.8495	302.25	43.5	0	0	0	0
GND	35.214	271.133	0	2.39E-05	32.5	2.02E-05	1.28E-05
57	35.214	271.133	8.66	8.25E-05	212.5	-6.96E-05	-4.43E-05
58	35.214	271.133	17.32	1.27E-04	212.6	-1.07E-04	-6.82E-05
59	35.214	271.133	25.98	1.28E-04	212.7	-1.08E-04	-6.92E-05
60	35.214	271.133	34.64	8.89E-05	212.8	-7.47E-05	-4.81E-05
END	35.214	271.133	43.3	0	0	0	0

MoM Model Details for Towers Driven Individually - Tower 5 - OC Self - (1 of 3)

GEOMETRY: Wire coordinates in degrees; other dimensions in meters
Environment: perfect ground

wire	caps	Distance	Angle	Z	radius	segs
1	none	0	0	0	.231	10
		0	0	86.8		
2	none	95.	273.	0	.205	10
		95.	273.	89.9		
3	none	190.	273.	0	.25	10
		190.	273.	90.2		
4	none	380.	273.	0	.205	10
		380.	273.	87.		
5	none	309.65	273.4	0	.198	5
		309.65	273.4	43.5		
6	none	261.72	268.7	0	.198	5
		261.72	268.7	43.5		
7	none	303.27	265.3	0	.198	5
		303.27	265.3	43.5		
8	none	273.41	277.4	0	.198	5
		273.41	277.4	43.3		

Number of wires = 8 current nodes = 60

Individual wires	minimum wire	minimum value	maximum wire	maximum value
segment length	8	8.66	3	9.02
radius	5	.198	3	.25

ELECTRICAL DESCRIPTION: Frequencies (MHz)

no.	frequency lowest	step	no. of steps	segment length (wavelengths) minimum	maximum
1	.68	0	1	.0240556	.0250556

Sources:

source	node	sector	magnitude	phase	type
1	41	1	1.	0	voltage

Lumped loads:

load	node	resistance (ohms)	reactance (ohms)	inductance (mH)	capacitance (uF)	passive circuit
1	1	0	-9,792.9	0	0	0
2	11	0	-9,792.9	0	0	0
3	21	0	-9,729.9	0	0	0
4	31	0	-9,729.9	0	0	0
5	41	0	0	0	0	0
6	46	0	7,594.9	0	0	0
7	51	0	7,594.9	0	0	0
8	56	0	7,594.9	0	0	0

IMPEDANCE: normalization = 50. source = 1; node 41, sector 1

freq (MHz)	resist (ohms)	react (ohms)	imped (ohms)	phase (deg)	VSWR	S11 dB	S12 dB
.68	5.6756	-284.61	284.67	271.1	294.37	-5.9E-02	-18.698

MoM Model Details for Towers Driven Individually - Tower 5 - OC Self - (2 of 3)

CURRENT rms Frequency = .68 MHz Input power = 3.502E-05 watts
Efficiency = 100. % coordinates in degrees

current no.	X	Y	Z	mag (amps)	phase (deg)	real (amps)	imaginary (amps)
GND	0	0	0	1.09E-06	116.8	-4.92E-07	9.73E-07
2	0	0	8.68	8.2E-06	116.8	-3.69E-06	7.32E-06
3	0	0	17.36	1.26E-05	116.6	-5.64E-06	1.12E-05
4	0	0	26.04	1.55E-05	116.5	-6.89E-06	1.38E-05
5	0	0	34.72	1.7E-05	116.3	-7.54E-06	1.53E-05
6	0	0	43.4	1.73E-05	116.1	-7.62E-06	1.56E-05
7	0	0	52.08	1.64E-05	115.9	-7.15E-06	1.47E-05
8	0	0	60.76	1.42E-05	115.6	-6.16E-06	1.28E-05
9	0	0	69.44	1.09E-05	115.3	-4.67E-06	9.86E-06
10	0	0	78.12	6.36E-06	115.1	-2.69E-06	5.76E-06
END	0	0	86.8	0	0	0	0
GND	4.97193	94.8698	0	1.5E-06	208.9	-1.31E-06	-7.25E-07
12	4.97193	94.8698	8.99	1.12E-05	208.8	-9.84E-06	-5.4E-06
13	4.97193	94.8698	17.98	1.73E-05	208.6	-1.51E-05	-8.26E-06
14	4.97193	94.8698	26.97	2.12E-05	208.4	-1.87E-05	-1.01E-05
15	4.97193	94.8698	35.96	2.33E-05	208.2	-2.06E-05	-1.1E-05
16	4.97193	94.8698	44.95	2.37E-05	208.	-2.09E-05	-1.11E-05
17	4.97193	94.8698	53.94	2.23E-05	207.7	-1.98E-05	-1.04E-05
18	4.97193	94.8698	62.93	1.93E-05	207.4	-1.72E-05	-8.89E-06
19	4.97193	94.8698	71.92	1.47E-05	207.	-1.31E-05	-6.7E-06
20	4.97193	94.8698	80.91	8.53E-06	206.7	-7.62E-06	-3.83E-06
END	4.97193	94.8698	89.9	0	0	0	0
GND	9.94386	189.74	0	2.27E-06	294.3	9.34E-07	-2.07E-06
22	9.94386	189.74	9.02	1.77E-05	294.3	7.28E-06	-1.61E-05
23	9.94386	189.74	18.04	2.69E-05	294.5	1.11E-05	-2.45E-05
24	9.94386	189.74	27.06	3.28E-05	294.6	1.36E-05	-2.99E-05
25	9.94386	189.74	36.08	3.58E-05	294.7	1.5E-05	-3.25E-05
26	9.94386	189.74	45.1	3.6E-05	294.8	1.51E-05	-3.27E-05
27	9.94386	189.74	54.12	3.37E-05	294.9	1.42E-05	-3.05E-05
28	9.94386	189.74	63.14	2.89E-05	295.	1.22E-05	-2.62E-05
29	9.94386	189.74	72.16	2.19E-05	295.1	9.28E-06	-1.98E-05
30	9.94386	189.74	81.18	1.26E-05	295.2	5.35E-06	-1.14E-05
END	9.94386	189.74	90.2	0	0	0	0
GND	19.8877	379.479	0	2.9E-06	332.6	2.58E-06	-1.34E-06
32	19.8877	379.479	8.7	2.09E-05	333.7	1.88E-05	-9.29E-06
33	19.8877	379.479	17.4	3.17E-05	335.3	2.88E-05	-1.32E-05
34	19.8877	379.479	26.1	3.83E-05	337.2	3.53E-05	-1.48E-05
35	19.8877	379.479	34.8	4.15E-05	339.2	3.88E-05	-1.47E-05
36	19.8877	379.479	43.5	4.16E-05	341.3	3.94E-05	-1.34E-05
37	19.8877	379.479	52.2	3.88E-05	343.2	3.72E-05	-1.12E-05
38	19.8877	379.479	60.9	3.34E-05	345.	3.22E-05	-8.62E-06
39	19.8877	379.479	69.6	2.53E-05	346.6	2.46E-05	-5.85E-06
40	19.8877	379.479	78.3	1.45E-05	348.	1.42E-05	-3.03E-06
END	19.8877	379.479	87.	0	0	0	0

MoM Model Details for Towers Driven Individually - Tower 5 - OC Self - (3 of 3)

current no.	X	Y	Z	mag (amps)	phase (deg)	real (amps)	imaginary (amps)
GND	18.3642	309.105	0	2.48E-03	88.9	4.95E-05	2.48E-03
42	18.3642	309.105	8.7	1.98E-03	88.6	4.76E-05	1.98E-03
43	18.3642	309.105	17.4	1.53E-03	88.4	4.19E-05	1.53E-03
44	18.3642	309.105	26.1	1.06E-03	88.2	3.25E-05	1.06E-03
45	18.3642	309.105	34.8	5.68E-04	88.1	1.91E-05	5.68E-04
END	18.3642	309.105	43.5	0	0	0	0
GND	-5.93764	261.653	0	2.05E-06	138.4	-1.53E-06	1.36E-06
47	-5.93764	261.653	8.7	6.85E-06	321.2	5.34E-06	-4.29E-06
48	-5.93764	261.653	17.4	1.E-05	325.1	8.24E-06	-5.74E-06
49	-5.93764	261.653	26.1	9.66E-06	330.2	8.38E-06	-4.81E-06
50	-5.93764	261.653	34.8	6.4E-06	336.2	5.85E-06	-2.58E-06
END	-5.93764	261.653	43.5	0	0	0	0
GND	-24.8495	302.25	0	2.46E-06	132.2	-1.65E-06	1.82E-06
52	-24.8495	302.25	8.7	7.96E-06	316.3	5.76E-06	-5.49E-06
53	-24.8495	302.25	17.4	1.13E-05	322.2	8.89E-06	-6.89E-06
54	-24.8495	302.25	26.1	1.04E-05	330.3	9.06E-06	-5.17E-06
55	-24.8495	302.25	34.8	6.73E-06	340.3	6.33E-06	-2.27E-06
END	-24.8495	302.25	43.5	0	0	0	0
GND	35.214	271.133	0	2.57E-06	129.7	-1.64E-06	1.98E-06
57	35.214	271.133	8.66	8.21E-06	314.1	5.71E-06	-5.9E-06
58	35.214	271.133	17.32	1.15E-05	320.4	8.83E-06	-7.3E-06
59	35.214	271.133	25.98	1.05E-05	329.3	9.E-06	-5.34E-06
60	35.214	271.133	34.64	6.68E-06	340.6	6.3E-06	-2.21E-06
END	35.214	271.133	43.3	0	0	0	0

MoM Model Details for Towers Driven Individually - Tower 6 - OC Self - (1 of 3)

GEOMETRY: Wire coordinates in degrees; other dimensions in meters
Environment: perfect ground

wire	caps	Distance	Angle	Z	radius	segs
1	none	0	0	0	.231	10
		0	0	86.8		
2	none	95.	273.	0	.205	10
		95.	273.	89.9		
3	none	190.	273.	0	.25	10
		190.	273.	90.2		
4	none	380.	273.	0	.205	10
		380.	273.	87.		
5	none	309.65	273.4	0	.198	5
		309.65	273.4	43.5		
6	none	261.72	268.7	0	.198	5
		261.72	268.7	43.5		
7	none	303.27	265.3	0	.198	5
		303.27	265.3	43.5		
8	none	273.41	277.4	0	.198	5
		273.41	277.4	43.3		

Number of wires = 8 current nodes = 60

Individual wires	minimum wire	minimum value	maximum wire	maximum value
segment length	8	8.66	3	9.02
radius	5	.198	3	.25

ELECTRICAL DESCRIPTION: Frequencies (MHz)

no.	frequency lowest	step	no. of steps	segment length (wavelengths) minimum	maximum
1	.68	0	1	.0240556	.0250556

Sources:

source	node	sector	magnitude	phase	type
1	46	1	1.	0	voltage

Lumped loads:

load	node	resistance (ohms)	reactance (ohms)	inductance (mH)	capacitance (uF)	passive circuit
1	1	0	-9,792.9	0	0	0
2	11	0	-9,792.9	0	0	0
3	21	0	-9,729.9	0	0	0
4	31	0	-9,729.9	0	0	0
5	41	0	7,594.9	0	0	0
6	46	0	0	0	0	0
7	51	0	7,594.9	0	0	0
8	56	0	7,594.9	0	0	0

IMPEDANCE: normalization = 50. source = 1; node 46, sector 1

freq (MHz)	resist (ohms)	react (ohms)	imped (ohms)	phase (deg)	VSWR	S11 dB	S12 dB
.68	5.666	-284.58	284.63	271.1	294.8	-5.9E-02	-18.704

MoM Model Details for Towers Driven Individually - Tower 6 - OC Self - (2 of 3)

CURRENT rms Frequency = .68 MHz Input power = 3.497E-05 watts
Efficiency = 100. % coordinates in degrees

current no.	X	Y	Z	mag (amps)	phase (deg)	real (amps)	imaginary (amps)
GND	0	0	0	1.3E-06	164.1	-1.25E-06	3.56E-07
2	0	0	8.68	9.79E-06	164.	-9.41E-06	2.69E-06
3	0	0	17.36	1.5E-05	163.9	-1.44E-05	4.16E-06
4	0	0	26.04	1.84E-05	163.7	-1.77E-05	5.17E-06
5	0	0	34.72	2.03E-05	163.5	-1.94E-05	5.75E-06
6	0	0	43.4	2.06E-05	163.3	-1.97E-05	5.92E-06
7	0	0	52.08	1.95E-05	163.1	-1.86E-05	5.67E-06
8	0	0	60.76	1.69E-05	162.8	-1.62E-05	5.E-06
9	0	0	69.44	1.29E-05	162.5	-1.24E-05	3.89E-06
10	0	0	78.12	7.54E-06	162.2	-7.18E-06	2.3E-06
END	0	0	86.8	0	0	0	0
GND	4.97193	94.8698	0	1.87E-06	253.8	-5.24E-07	-1.8E-06
12	4.97193	94.8698	8.99	1.4E-05	253.7	-3.93E-06	-1.34E-05
13	4.97193	94.8698	17.98	2.15E-05	253.5	-6.08E-06	-2.06E-05
14	4.97193	94.8698	26.97	2.64E-05	253.4	-7.53E-06	-2.53E-05
15	4.97193	94.8698	35.96	2.89E-05	253.2	-8.34E-06	-2.77E-05
16	4.97193	94.8698	44.95	2.93E-05	253.	-8.54E-06	-2.8E-05
17	4.97193	94.8698	53.94	2.75E-05	252.8	-8.13E-06	-2.63E-05
18	4.97193	94.8698	62.93	2.38E-05	252.6	-7.11E-06	-2.27E-05
19	4.97193	94.8698	71.92	1.81E-05	252.3	-5.48E-06	-1.72E-05
20	4.97193	94.8698	80.91	1.04E-05	252.	-3.21E-06	-9.9E-06
END	4.97193	94.8698	89.9	0	0	0	0
GND	9.94386	189.74	0	2.98E-06	331.2	2.61E-06	-1.43E-06
22	9.94386	189.74	9.02	2.3E-05	332.2	2.04E-05	-1.07E-05
23	9.94386	189.74	18.04	3.49E-05	333.7	3.13E-05	-1.55E-05
24	9.94386	189.74	27.06	4.23E-05	335.4	3.84E-05	-1.76E-05
25	9.94386	189.74	36.08	4.58E-05	337.2	4.22E-05	-1.78E-05
26	9.94386	189.74	45.1	4.59E-05	339.	4.28E-05	-1.65E-05
27	9.94386	189.74	54.12	4.28E-05	340.7	4.04E-05	-1.42E-05
28	9.94386	189.74	63.14	3.67E-05	342.2	3.5E-05	-1.12E-05
29	9.94386	189.74	72.16	2.78E-05	343.6	2.66E-05	-7.83E-06
30	9.94386	189.74	81.18	1.6E-05	344.8	1.54E-05	-4.19E-06
END	9.94386	189.74	90.2	0	0	0	0
GND	19.8877	379.479	0	2.16E-06	293.6	8.64E-07	-1.98E-06
32	19.8877	379.479	8.7	1.57E-05	293.6	6.28E-06	-1.44E-05
33	19.8877	379.479	17.4	2.39E-05	293.7	9.61E-06	-2.19E-05
34	19.8877	379.479	26.1	2.91E-05	293.8	1.18E-05	-2.67E-05
35	19.8877	379.479	34.8	3.18E-05	293.9	1.29E-05	-2.91E-05
36	19.8877	379.479	43.5	3.2E-05	294.	1.3E-05	-2.92E-05
37	19.8877	379.479	52.2	3.E-05	294.2	1.23E-05	-2.73E-05
38	19.8877	379.479	60.9	2.57E-05	294.3	1.06E-05	-2.35E-05
39	19.8877	379.479	69.6	1.95E-05	294.3	8.03E-06	-1.78E-05
40	19.8877	379.479	78.3	1.12E-05	294.4	4.62E-06	-1.02E-05
END	19.8877	379.479	87.	0	0	0	0

MoM Model Details for Towers Driven Individually - Tower 6 - OC Self - (3 of 3)

current no.	X	Y	Z	mag (amps)	phase (deg)	real (amps)	imaginary (amps)
GND	18.3642	309.105	0	2.05E-06	138.4	-1.53E-06	1.36E-06
42	18.3642	309.105	8.7	6.85E-06	321.2	5.34E-06	-4.29E-06
43	18.3642	309.105	17.4	1.E-05	325.1	8.24E-06	-5.74E-06
44	18.3642	309.105	26.1	9.66E-06	330.2	8.38E-06	-4.81E-06
45	18.3642	309.105	34.8	6.4E-06	336.2	5.85E-06	-2.58E-06
END	18.3642	309.105	43.5	0	0	0	0
GND	-5.93764	261.653	0	2.48E-03	88.9	4.95E-05	2.48E-03
47	-5.93764	261.653	8.7	1.98E-03	88.6	4.76E-05	1.98E-03
48	-5.93764	261.653	17.4	1.53E-03	88.4	4.19E-05	1.53E-03
49	-5.93764	261.653	26.1	1.06E-03	88.3	3.24E-05	1.06E-03
50	-5.93764	261.653	34.8	5.68E-04	88.1	1.9E-05	5.68E-04
END	-5.93764	261.653	43.5	0	0	0	0
GND	-24.8495	302.25	0	2.38E-06	133.1	-1.63E-06	1.74E-06
52	-24.8495	302.25	8.7	7.74E-06	317.2	5.68E-06	-5.26E-06
53	-24.8495	302.25	17.4	1.1E-05	322.9	8.77E-06	-6.64E-06
54	-24.8495	302.25	26.1	1.03E-05	330.6	8.93E-06	-5.03E-06
55	-24.8495	302.25	34.8	6.64E-06	340.2	6.24E-06	-2.25E-06
END	-24.8495	302.25	43.5	0	0	0	0
GND	35.214	271.133	0	2.54E-06	130.6	-1.65E-06	1.93E-06
57	35.214	271.133	8.66	8.13E-06	314.9	5.74E-06	-5.76E-06
58	35.214	271.133	17.32	1.14E-05	321.1	8.86E-06	-7.16E-06
59	35.214	271.133	25.98	1.05E-05	329.6	9.04E-06	-5.29E-06
60	35.214	271.133	34.64	6.71E-06	340.5	6.32E-06	-2.24E-06
END	35.214	271.133	43.3	0	0	0	0

MoM Model Details for Towers Driven Individually - Tower 7 - OC Self – (1 of 3)

GEOMETRY: Wire coordinates in degrees; other dimensions in meters
Environment: perfect ground

wire	caps	Distance	Angle	Z	radius	segs
1	none	0	0	0	.231	10
		0	0	86.8		
2	none	95.	273.	0	.205	10
		95.	273.	89.9		
3	none	190.	273.	0	.25	10
		190.	273.	90.2		
4	none	380.	273.	0	.205	10
		380.	273.	87.		
5	none	309.65	273.4	0	.198	5
		309.65	273.4	43.5		
6	none	261.72	268.7	0	.198	5
		261.72	268.7	43.5		
7	none	303.27	265.3	0	.198	5
		303.27	265.3	43.5		
8	none	273.41	277.4	0	.198	5
		273.41	277.4	43.3		

Number of wires = 8 current nodes = 60

Individual wires	minimum wire	minimum value	maximum wire	maximum value
segment length	8	8.66	3	9.02
radius	5	.198	3	.25

ELECTRICAL DESCRIPTION: Frequencies (MHz)

no.	frequency lowest	step	no. of steps	segment length (wavelengths) minimum	maximum
1	.68	0	1	.0240556	.0250556

Sources:

source	node	sector	magnitude	phase	type
1	51	1	1.	0	voltage

Lumped loads:

load	node	resistance (ohms)	reactance (ohms)	inductance (mH)	capacitance (uF)	passive circuit
1	1	0	-9,792.9	0	0	0
2	11	0	-9,792.9	0	0	0
3	21	0	-9,729.9	0	0	0
4	31	0	-9,729.9	0	0	0
5	41	0	7,594.9	0	0	0
6	46	0	7,594.9	0	0	0
7	51	0	0	0	0	0
8	56	0	7,594.9	0	0	0

IMPEDANCE: normalization = 50. source = 1; node 51, sector 1

freq (MHz)	resist (ohms)	react (ohms)	imped (ohms)	phase (deg)	VSWR	S11 dB	S12 dB
.68	5.6382	-284.52	284.57	271.1	296.12	-5.9E-02	-18.723

MoM Model Details for Towers Driven Individually - Tower 7 - OC Self - (2 of 3)

CURRENT rms Frequency = .68 MHz Input power = 3.481E-05 watts
Efficiency = 100. % coordinates in degrees

current no.	X	Y	Z	mag (amps)	phase (deg)	real (amps)	imaginary (amps)
GND	0	0	0	1.11E-06	123.6	-6.16E-07	9.26E-07
2	0	0	8.68	8.36E-06	123.5	-4.62E-06	6.97E-06
3	0	0	17.36	1.28E-05	123.4	-7.06E-06	1.07E-05
4	0	0	26.04	1.58E-05	123.3	-8.64E-06	1.32E-05
5	0	0	34.72	1.74E-05	123.1	-9.47E-06	1.45E-05
6	0	0	43.4	1.77E-05	122.9	-9.58E-06	1.48E-05
7	0	0	52.08	1.67E-05	122.6	-9.01E-06	1.41E-05
8	0	0	60.76	1.45E-05	122.4	-7.78E-06	1.23E-05
9	0	0	69.44	1.11E-05	122.1	-5.91E-06	9.42E-06
10	0	0	78.12	6.48E-06	121.8	-3.42E-06	5.5E-06
END	0	0	86.8	0	0	0	0
GND	4.97193	94.8698	0	1.53E-06	214.3	-1.27E-06	-8.64E-07
12	4.97193	94.8698	8.99	1.15E-05	214.2	-9.48E-06	-6.44E-06
13	4.97193	94.8698	17.98	1.76E-05	214.	-1.46E-05	-9.86E-06
14	4.97193	94.8698	26.97	2.17E-05	213.8	-1.8E-05	-1.21E-05
15	4.97193	94.8698	35.96	2.38E-05	213.6	-1.98E-05	-1.32E-05
16	4.97193	94.8698	44.95	2.42E-05	213.4	-2.02E-05	-1.33E-05
17	4.97193	94.8698	53.94	2.28E-05	213.1	-1.91E-05	-1.24E-05
18	4.97193	94.8698	62.93	1.97E-05	212.8	-1.66E-05	-1.07E-05
19	4.97193	94.8698	71.92	1.5E-05	212.5	-1.27E-05	-8.07E-06
20	4.97193	94.8698	80.91	8.7E-06	212.1	-7.36E-06	-4.62E-06
END	4.97193	94.8698	89.9	0	0	0	0
GND	9.94386	189.74	0	2.3E-06	296.5	1.02E-06	-2.06E-06
22	9.94386	189.74	9.02	1.79E-05	296.5	7.99E-06	-1.6E-05
23	9.94386	189.74	18.04	2.73E-05	296.7	1.22E-05	-2.44E-05
24	9.94386	189.74	27.06	3.32E-05	296.8	1.5E-05	-2.97E-05
25	9.94386	189.74	36.08	3.62E-05	297.	1.64E-05	-3.23E-05
26	9.94386	189.74	45.1	3.64E-05	297.1	1.66E-05	-3.24E-05
27	9.94386	189.74	54.12	3.41E-05	297.3	1.56E-05	-3.03E-05
28	9.94386	189.74	63.14	2.92E-05	297.4	1.35E-05	-2.6E-05
29	9.94386	189.74	72.16	2.21E-05	297.5	1.02E-05	-1.96E-05
30	9.94386	189.74	81.18	1.27E-05	297.6	5.89E-06	-1.13E-05
END	9.94386	189.74	90.2	0	0	0	0
GND	19.8877	379.479	0	2.6E-06	319.3	1.97E-06	-1.69E-06
32	19.8877	379.479	8.7	1.88E-05	319.8	1.44E-05	-1.21E-05
33	19.8877	379.479	17.4	2.85E-05	320.5	2.2E-05	-1.82E-05
34	19.8877	379.479	26.1	3.46E-05	321.2	2.7E-05	-2.17E-05
35	19.8877	379.479	34.8	3.76E-05	322.1	2.97E-05	-2.31E-05
36	19.8877	379.479	43.5	3.77E-05	323.	3.01E-05	-2.27E-05
37	19.8877	379.479	52.2	3.51E-05	323.9	2.84E-05	-2.07E-05
38	19.8877	379.479	60.9	3.01E-05	324.7	2.45E-05	-1.74E-05
39	19.8877	379.479	69.6	2.27E-05	325.5	1.87E-05	-1.29E-05
40	19.8877	379.479	78.3	1.3E-05	326.2	1.08E-05	-7.23E-06
END	19.8877	379.479	87.	0	0	0	0

MoM Model Details for Towers Driven Individually - Tower 7 - OC Self - (3 of 3)

current no.	X	Y	Z	mag (amps)	phase (deg)	real (amps)	imaginary (amps)
GND	18.3642	309.105	0	2.46E-06	132.2	-1.65E-06	1.82E-06
42	18.3642	309.105	8.7	7.96E-06	316.4	5.76E-06	-5.49E-06
43	18.3642	309.105	17.4	1.12E-05	322.2	8.89E-06	-6.89E-06
44	18.3642	309.105	26.1	1.04E-05	330.3	9.06E-06	-5.17E-06
45	18.3642	309.105	34.8	6.73E-06	340.3	6.33E-06	-2.27E-06
END	18.3642	309.105	43.5	0	0	0	0
GND	-5.93764	261.653	0	2.38E-06	133.1	-1.63E-06	1.74E-06
47	-5.93764	261.653	8.7	7.74E-06	317.2	5.68E-06	-5.26E-06
48	-5.93764	261.653	17.4	1.1E-05	322.9	8.77E-06	-6.64E-06
49	-5.93764	261.653	26.1	1.02E-05	330.6	8.93E-06	-5.03E-06
50	-5.93764	261.653	34.8	6.64E-06	340.2	6.24E-06	-2.25E-06
END	-5.93764	261.653	43.5	0	0	0	0
GND	-24.8495	302.25	0	2.48E-03	88.9	4.92E-05	2.48E-03
52	-24.8495	302.25	8.7	1.98E-03	88.6	4.73E-05	1.98E-03
53	-24.8495	302.25	17.4	1.53E-03	88.4	4.17E-05	1.53E-03
54	-24.8495	302.25	26.1	1.06E-03	88.3	3.23E-05	1.06E-03
55	-24.8495	302.25	34.8	5.69E-04	88.1	1.89E-05	5.68E-04
END	-24.8495	302.25	43.5	0	0	0	0
GND	35.214	271.133	0	1.74E-06	141.	-1.35E-06	1.09E-06
57	35.214	271.133	8.66	5.89E-06	322.5	4.67E-06	-3.59E-06
58	35.214	271.133	17.32	8.84E-06	324.4	7.19E-06	-5.14E-06
59	35.214	271.133	25.98	8.72E-06	326.9	7.31E-06	-4.76E-06
60	35.214	271.133	34.64	5.89E-06	329.8	5.09E-06	-2.96E-06
END	35.214	271.133	43.3	0	0	0	0

MoM Model Details for Towers Driven Individually - Tower 8 - OC Self - (1 of 3)

GEOMETRY: Wire coordinates in degrees; other dimensions in meters
Environment: perfect ground

wire	caps	Distance	Angle	Z	radius	segs
1	none	0	0	0	.231	10
		0	0	86.8		
2	none	95.	273.	0	.205	10
		95.	273.	89.9		
3	none	190.	273.	0	.25	10
		190.	273.	90.2		
4	none	380.	273.	0	.205	10
		380.	273.	87.		
5	none	309.65	273.4	0	.198	5
		309.65	273.4	43.5		
6	none	261.72	268.7	0	.198	5
		261.72	268.7	43.5		
7	none	303.27	265.3	0	.198	5
		303.27	265.3	43.5		
8	none	273.41	277.4	0	.198	5
		273.41	277.4	43.3		

Number of wires = 8 current nodes = 60

Individual wires	minimum wire	minimum value	maximum wire	maximum value
segment length	8	8.66	3	9.02
radius	5	.198	3	.25

ELECTRICAL DESCRIPTION: Frequencies (MHz)

no.	frequency lowest	step	no. of steps	segment length (wavelengths) minimum	maximum
1	.68	0	1	.0240556	.0250556

Sources:

source	node	sector	magnitude	phase	type
1	56	1	1.	0	voltage

Lumped loads:

load	node	resistance (ohms)	reactance (ohms)	inductance (mH)	capacitance (uF)	passive circuit
1	1	0	-9,792.9	0	0	0
2	11	0	-9,792.9	0	0	0
3	21	0	-9,729.9	0	0	0
4	31	0	-9,729.9	0	0	0
5	41	0	7,594.9	0	0	0
6	46	0	7,594.9	0	0	0
7	51	0	7,594.9	0	0	0
8	56	0	0	0	0	0

IMPEDANCE: normalization = 50. source = 1; node 56, sector 1

freq (MHz)	resist (ohms)	react (ohms)	imped (ohms)	phase (deg)	VSWR	S11 dB	S12 dB
.68	5.5575	-286.32	286.38	271.1	304.13	-5.7E-02	-18.839

MoM Model Details for Towers Driven Individually - Tower 8 - OC Self - (2 of 3)

CURRENT rms Frequency = .68 MHz Input power = 3.388E-05 watts
Efficiency = 100. % coordinates in degrees

current no.	X	Y	Z	mag (amps)	phase (deg)	real (amps)	imaginary (amps)
2	0	0	8.68	9.23E-06	153.	-8.22E-06	4.2E-06
3	0	0	17.36	1.41E-05	152.8	-1.26E-05	6.46E-06
4	0	0	26.04	1.74E-05	152.6	-1.54E-05	7.99E-06
5	0	0	34.72	1.91E-05	152.5	-1.7E-05	8.85E-06
6	0	0	43.4	1.95E-05	152.2	-1.72E-05	9.06E-06
7	0	0	52.08	1.84E-05	152.	-1.62E-05	8.63E-06
8	0	0	60.76	1.6E-05	151.7	-1.41E-05	7.56E-06
9	0	0	69.44	1.22E-05	151.5	-1.07E-05	5.84E-06
10	0	0	78.12	7.12E-06	151.1	-6.24E-06	3.44E-06
END	0	0	86.8	0	0	0	0
GND	4.97193	94.8698	0	1.75E-06	243.2	-7.86E-07	-1.56E-06
12	4.97193	94.8698	8.99	1.3E-05	243.1	-5.89E-06	-1.16E-05
13	4.97193	94.8698	17.98	2.E-05	243.	-9.09E-06	-1.78E-05
14	4.97193	94.8698	26.97	2.46E-05	242.8	-1.12E-05	-2.19E-05
15	4.97193	94.8698	35.96	2.7E-05	242.6	-1.24E-05	-2.4E-05
16	4.97193	94.8698	44.95	2.73E-05	242.4	-1.27E-05	-2.42E-05
17	4.97193	94.8698	53.94	2.57E-05	242.2	-1.2E-05	-2.28E-05
18	4.97193	94.8698	62.93	2.22E-05	241.9	-1.05E-05	-1.96E-05
19	4.97193	94.8698	71.92	1.69E-05	241.6	-8.04E-06	-1.49E-05
20	4.97193	94.8698	80.91	9.76E-06	241.3	-4.69E-06	-8.56E-06
END	4.97193	94.8698	89.9	0	0	0	0
GND	9.94386	189.74	0	2.74E-06	322.8	2.19E-06	-1.66E-06
22	9.94386	189.74	9.02	2.12E-05	323.4	1.71E-05	-1.27E-05
23	9.94386	189.74	18.04	3.22E-05	324.3	2.62E-05	-1.88E-05
24	9.94386	189.74	27.06	3.91E-05	325.2	3.21E-05	-2.23E-05
25	9.94386	189.74	36.08	4.24E-05	326.3	3.53E-05	-2.35E-05
26	9.94386	189.74	45.1	4.25E-05	327.4	3.58E-05	-2.29E-05
27	9.94386	189.74	54.12	3.95E-05	328.5	3.37E-05	-2.07E-05
28	9.94386	189.74	63.14	3.38E-05	329.5	2.92E-05	-1.72E-05
29	9.94386	189.74	72.16	2.55E-05	330.4	2.22E-05	-1.26E-05
30	9.94386	189.74	81.18	1.47E-05	331.2	1.29E-05	-7.06E-06
END	9.94386	189.74	90.2	0	0	0	0
GND	19.8877	379.479	0	2.27E-06	303.2	1.24E-06	-1.9E-06
32	19.8877	379.479	8.7	1.65E-05	303.4	9.05E-06	-1.37E-05
33	19.8877	379.479	17.4	2.5E-05	303.6	1.39E-05	-2.09E-05
34	19.8877	379.479	26.1	3.05E-05	303.9	1.7E-05	-2.53E-05
35	19.8877	379.479	34.8	3.32E-05	304.2	1.87E-05	-2.75E-05
36	19.8877	379.479	43.5	3.34E-05	304.4	1.89E-05	-2.75E-05
37	19.8877	379.479	52.2	3.12E-05	304.7	1.78E-05	-2.56E-05
38	19.8877	379.479	60.9	2.68E-05	305.	1.54E-05	-2.19E-05
39	19.8877	379.479	69.6	2.02E-05	305.3	1.17E-05	-1.65E-05
40	19.8877	379.479	78.3	1.16E-05	305.5	6.75E-06	-9.44E-06
END	19.8877	379.479	87.	0	0	0	0

MoM Model Details for Towers Driven Individually - Tower 8 - OC Self - (3 of 3)

current no.	X	Y	Z	mag (amps)	phase (deg)	real (amps)	imaginary (amps)
GND	18.3642	309.105	0	2.56E-06	129.8	-1.64E-06	1.97E-06
42	18.3642	309.105	8.7	8.18E-06	314.2	5.7E-06	-5.87E-06
43	18.3642	309.105	17.4	1.14E-05	320.6	8.81E-06	-7.23E-06
44	18.3642	309.105	26.1	1.04E-05	329.7	8.99E-06	-5.24E-06
45	18.3642	309.105	34.8	6.64E-06	341.2	6.28E-06	-2.14E-06
END	18.3642	309.105	43.5	0	0	0	0
GND	-5.93764	261.653	0	2.52E-06	130.7	-1.64E-06	1.91E-06
47	-5.93764	261.653	8.7	8.1E-06	315.	5.73E-06	-5.73E-06
48	-5.93764	261.653	17.4	1.13E-05	321.3	8.85E-06	-7.1E-06
49	-5.93764	261.653	26.1	1.04E-05	330.	9.02E-06	-5.2E-06
50	-5.93764	261.653	34.8	6.67E-06	341.	6.3E-06	-2.17E-06
END	-5.93764	261.653	43.5	0	0	0	0
GND	-24.8495	302.25	0	1.72E-06	141.	-1.34E-06	1.09E-06
52	-24.8495	302.25	8.7	5.87E-06	322.5	4.66E-06	-3.57E-06
53	-24.8495	302.25	17.4	8.82E-06	324.5	7.18E-06	-5.12E-06
54	-24.8495	302.25	26.1	8.7E-06	327.	7.29E-06	-4.74E-06
55	-24.8495	302.25	34.8	5.87E-06	329.9	5.08E-06	-2.94E-06
END	-24.8495	302.25	43.5	0	0	0	0
GND	35.214	271.133	0	2.47E-03	88.9	4.79E-05	2.47E-03
57	35.214	271.133	8.66	1.96E-03	88.7	4.61E-05	1.96E-03
58	35.214	271.133	17.32	1.52E-03	88.5	4.06E-05	1.52E-03
59	35.214	271.133	25.98	1.05E-03	88.3	3.14E-05	1.05E-03
60	35.214	271.133	34.64	5.64E-04	88.1	1.84E-05	5.64E-04
END	35.214	271.133	43.3	0	0	0	0

Derivation of Directional Antenna Operating Parameters

With the antenna array characteristics now verified and the model converged for the individual towers, moment method calculations ("Medium Wave Array Synthesis") were made for each directional mode of operation using the daytime and nighttime licensed theoretical (*normalized*) antenna field ratio magnitudes and phases for the KFEQ directional patterns, in conjunction with the established (*corrected*) KFEQ array geometry, the geometry established for the KESJ towers (by survey) with respect to the KFEQ reference Tower #1 (East), and the converged tower heights and radii. For the unused detuned KFEQ towers (Tower 4 – West

daytime and Tower 2 – East Central Nighttime), "drive" voltages were employed of 0.00001 magnitude at 0° phase. Similarly, a drive voltage of 0.00001 magnitude and 0° phase was assumed for the unused KESJ towers. This process yields the directional antenna complex voltage values and impedances for sources located at ground level for each tower of the array for each mode (daytime/nighttime) considered.

Notice is then taken of the impedance value shown at the base of the unused KFEQ tower in each mode, and the conjugate of these values is then employed for lumped loads for these towers. With respect to the KESJ towers, since they are electrically transparent at the KFEQ frequency, only the existing (static drain choke and base insulator) lumped loads across those tower bases (as discussed previously) are employed as "lumped loads" for the KESJ towers in the array synthesis. The model is then re-run for each mode of operation with the lumped loads applied as described, with the KFEQ towers being driven using the normalized licensed theoretical field and ratio values appropriate for each directional pattern. The results yield the directional antenna complex voltage values for sources located at ground level for each tower of the array that would produce current moment sums for the towers. These values, when normalized, will equate to the theoretical field parameters for the respective authorized directional antenna patterns. Tower base currents and driving point impedances are then calculated for the directional pattern. (The indicated voltages and currents that are not specified as "RMS" values are corresponding "peak" values.) The currents at the ATU J-plug "reference point" outputs (where the TCT derived antenna monitor samples are taken) were then calculated from the MoM tower currents using the WCAP circuit modeling software, along with the base environment assumptions that were derived from the single tower open-circuit measurements, and the MoM-calculated directional antenna operating impedances, and corresponding base voltages and currents.

The following pages provide details of the MoM array synthesis modeling performed for the directional antenna along with the resulting normalized antenna monitor parameters, derived from the WCAP analysis.

MoM Model Details – Daytime Directional Antenna Array Synthesis (1 of 7)

DAYTIME MEDIUM WAVE ARRAY SYNTHESIS FROM FIELD RATIOS

Frequency = 0.68 MHz

Tower	Field Ratio Magnitude	Phase (deg)
1	0.675	-162.4
2	1	0
3	0.535	-123.4
4	1.00E-05	0
5	1.00E-05	0
6	1.00E-05	0
7	1.00E-05	0
8	1.00E-05	0

VOLTAGES AND CURRENTS - rms

Source Node	Voltage Magnitude	Current Phase (deg)	Current Magnitude	Phase (deg)
1	265.015	245.4	9.622270	199.3
11	344.117	67.2	13.748500	0.9
21	502.983	306.2	6.811860	239.0
31	236.098	152.5	0.367086	241.9
41	160.852	214.5	0.131708	304.5
46	189.596	252.0	0.155648	342.3
51	158.769	217.9	0.130151	308.0
56	180.811	243.0	0.147799	333.3

Sum of square of source currents = 656.45
Total power = 5,000. watts

MoM Model Details – Daytime Directional Antenna Array Synthesis (2 of 7)

TOWER ADMITTANCE MATRIX

admittance	real (mhos)	imaginary (mhos)
Y(1, 1)	0.021801	-0.00741
Y(1, 2)	0.000654	0.014258
Y(1, 3)	9.86E-05	-0.00178
Y(1, 4)	-0.00145	0.000344
Y(1, 5)	8.64E-05	7.67E-06
Y(1, 6)	8.75E-05	2.54E-05
Y(1, 7)	9.55E-05	8.28E-06
Y(1, 8)	9.31E-05	2.16E-05
Y(2, 1)	0.000655	0.014258
Y(2, 2)	0.006035	-0.01237
Y(2, 3)	0.003961	0.009461
Y(2, 4)	-0.00091	-0.00312
Y(2, 5)	8.12E-07	0.000189
Y(2, 6)	-4.49E-05	0.000188
Y(2, 7)	-1.86E-06	0.000206
Y(2, 8)	-3.27E-05	0.000203
Y(3, 1)	9.85E-05	-0.00178
Y(3, 2)	0.00396	0.009461
Y(3, 3)	0.018001	-0.00704
Y(3, 4)	0.011738	0.005549
Y(3, 5)	-0.00081	-0.00051
Y(3, 6)	-0.00098	-0.00093
Y(3, 7)	-0.00092	-0.00049
Y(3, 8)	-0.00098	-0.00082
Y(4, 1)	-0.00145	0.000344
Y(4, 2)	-0.00091	-0.00312
Y(4, 3)	0.011738	0.00555
Y(4, 4)	0.029988	0.004501
Y(4, 5)	-0.00062	-0.00135
Y(4, 6)	-0.00078	-0.00087
Y(4, 7)	-0.0008	-0.00114
Y(4, 8)	-0.00079	-0.00098

TOWER ADMITTANCE MATRIX

admittance	real (mhos)	imaginary (mhos)
Y(5, 1)	8.64E-05	7.67E-06
Y(5, 2)	8.17E-07	0.000189
Y(5, 3)	-0.00081	-0.00051
Y(5, 4)	-0.00062	-0.00135
Y(5, 5)	4.52E-05	0.003579
Y(5, 6)	5.15E-05	2.67E-05
Y(5, 7)	5.03E-05	2.16E-06
Y(5, 8)	5.30E-05	3.18E-06
Y(6, 1)	8.75E-05	2.54E-05
Y(6, 2)	-4.49E-05	0.000188
Y(6, 3)	-0.00098	-0.00093
Y(6, 4)	-0.00078	-0.00087
Y(6, 5)	5.15E-05	2.67E-05
Y(6, 6)	6.40E-05	0.003592
Y(6, 7)	6.56E-05	1.16E-05
Y(6, 8)	5.75E-05	8.94E-06
Y(7, 1)	9.55E-05	8.28E-06
Y(7, 2)	-1.86E-06	0.000206
Y(7, 3)	-0.00092	-0.00049
Y(7, 4)	-0.0008	-0.00114
Y(7, 5)	5.03E-05	2.16E-06
Y(7, 6)	6.56E-05	1.16E-05
Y(7, 7)	7.20E-05	0.003583
Y(7, 8)	5.28E-05	3.58E-05
Y(8, 1)	9.31E-05	2.16E-05
Y(8, 2)	-3.27E-05	0.000203
Y(8, 3)	-0.00098	-0.00082
Y(8, 4)	-0.00079	-0.00098
Y(8, 5)	5.30E-05	3.19E-06
Y(8, 6)	5.75E-05	8.95E-06
Y(8, 7)	5.28E-05	3.58E-05
Y(8, 8)	6.57E-05	0.003572

MoM Model Details – Daytime Directional Antenna Array Synthesis (3 of 7)

TOWER IMPEDANCE MATRIX

impedance	real (mhos)	imaginary (mhos)
Z(1, 1)	35.6036	0.547378
Z(1, 2)	17.6231	-17.197
Z(1, 3)	-11.2498	-12.8395
Z(1, 4)	6.34419	6.87672
Z(1, 5)	-2.03021	3.77249
Z(1, 6)	-4.93627	1.25998
Z(1, 7)	-2.50757	3.57161
Z(1, 8)	-4.36536	2.08021
Z(2, 1)	17.6245	-17.1958
Z(2, 2)	38.2204	18.2619
Z(2, 3)	18.6546	-18.6317
Z(2, 4)	-9.37858	7.67616
Z(2, 5)	-5.10753	-2.96983
Z(2, 6)	-1.88504	-7.10714
Z(2, 7)	-4.90314	-3.50783
Z(2, 8)	-2.96289	-6.22434
Z(3, 1)	-11.2493	-12.8398
Z(3, 2)	18.6547	-18.6316
Z(3, 3)	40.3574	20.2964
Z(3, 4)	-10.4243	-12.7302
Z(3, 5)	3.82151	-8.02861
Z(3, 6)	10.314	-5.37355
Z(3, 7)	4.17251	-7.97529
Z(3, 8)	8.7203	-6.33322
Z(4, 1)	6.34419	6.87673
Z(4, 2)	-9.3785	7.67637
Z(4, 3)	-10.4248	-12.7299
Z(4, 4)	36.1562	1.35418
Z(4, 5)	10.1837	-5.00896
Z(4, 6)	3.54332	-7.69532
Z(4, 7)	7.85073	-6.46061
Z(4, 8)	5.0535	-7.38676

TOWER IMPEDANCE MATRIX

impedance	real (mhos)	imaginary (mhos)
Z(5, 1)	-2.03019	3.77249
Z(5, 2)	-5.10765	-2.9697
Z(5, 3)	3.82097	-8.02896
Z(5, 4)	10.1837	-5.00896
Z(5, 5)	5.67102	-284.608
Z(5, 6)	4.59588	-3.92875
Z(5, 7)	4.96507	-5.25936
Z(5, 8)	4.9569	-5.72777
Z(6, 1)	-4.93625	1.25996
Z(6, 2)	-1.8853	-7.10712
Z(6, 3)	10.3133	-5.37482
Z(6, 4)	3.54336	-7.69535
Z(6, 5)	4.59589	-3.92875
Z(6, 6)	5.66234	-284.578
Z(6, 7)	4.8944	-5.02392
Z(6, 8)	4.97284	-5.57071
Z(7, 1)	-2.50755	3.57162
Z(7, 2)	-4.90328	-3.5077
Z(7, 3)	4.17196	-7.97567
Z(7, 4)	7.8508	-6.46062
Z(7, 5)	4.96507	-5.25937
Z(7, 6)	4.8944	-5.02392
Z(7, 7)	5.63642	-284.518
Z(7, 8)	4.02842	-3.14022
Z(8, 1)	-4.36533	2.0802
Z(8, 2)	-2.96313	-6.22425
Z(8, 3)	8.71956	-6.33427
Z(8, 4)	5.05347	-7.38682
Z(8, 5)	4.95686	-5.7284
Z(8, 6)	4.97278	-5.5713
Z(8, 7)	4.02838	-3.1404
Z(8, 8)	5.55586	-286.323

MoM Model Details - Daytime Directional Antenna Array Synthesis (4 of 7)

GEOMETRY: Wire coordinates in degrees; other dimensions in meters
Environment: perfect ground

wire	caps	Distance	Angle	Z	radius	segs
1	none	0	0	0	.231	10
		0	0	86.8		
2	none	95.	273.	0	.205	10
		95.	273.	89.9		
3	none	190.	273.	0	.25	10
		190.	273.	90.2		
4	none	380.	273.	0	.205	10
		380.	273.	87.		
5	none	309.65	273.4	0	.198	5
		309.65	273.4	43.5		
6	none	261.72	268.7	0	.198	5
		261.72	268.7	43.5		
7	none	303.27	265.3	0	.198	5
		303.27	265.3	43.5		
8	none	273.41	277.4	0	.198	5
		273.41	277.4	43.3		

Number of wires = 8 current nodes = 60

	minimum		maximum	
Individual wires	wire	value	wire	value
segment length	8	8.66	3	9.02
radius	5	.198	3	.25

ELECTRICAL DESCRIPTION: Frequencies (MHz)

no.	frequency lowest	step	no. of steps	segment length (wavelengths) minimum	maximum
1	.68	0	1	.0240556	.0250556

MoM Model Details - Daytime Directional Antenna Array Synthesis (5 of 7)

Sources:

source	node	sector	magnitude	phase	type
1	1	1	374.788	245.4	voltage
2	11	1	486.655	67.2	voltage
3	21	1	711.325	306.2	voltage

Lumped loads:

load	node	resistance (ohms)	reactance (ohms)	inductance (mH)	capacitance (uF)	passive circuit
1	31	0	643.14	0	0	0
2	41	0	7,594.9	0	0	0
3	46	0	7,594.9	0	0	0
4	51	0	7,594.9	0	0	0
5	56	0	7,594.9	0	0	0

IMPEDANCE normalization = 50.

source = 1; node 1, sector 1 (Tower 1 - East)

freq (MHz)	resist (ohms)	react (ohms)	imped (ohms)	phase (deg)	VSWR	S11 dB	S12 dB
.68	19.106	19.856	27.555	46.1	3.088	-5.8355	-1.3129

source = 2; node 11, sector 1 (Tower 2 - East Central)

freq (MHz)	resist (ohms)	react (ohms)	imped (ohms)	phase (deg)	VSWR	S11 dB	S12 dB
.68	10.098	22.905	25.032	66.2	6.0264	-2.9095	-3.1135

source = 3; node 21, sector 1 (Tower 3 - West Central)

freq (MHz)	resist (ohms)	react (ohms)	imped (ohms)	phase (deg)	VSWR	S11 dB	S12 dB
.68	28.301	66.986	72.719	67.1	5.3157	-3.3074	-2.7322

MoM Model Details - Daytime Directional Antenna Array Synthesis (6 of 7)

CURRENT: rms Frequency: 0.68 MHz Input power: 5000. watts
Efficiency: 100. % coordinates in degrees

current no.	X	Y	Z	mag (amps)	phase (deg)	real (amps)	imaginary (amps)
GND	0	0	0 Twr 1	9.58927	199.3	-9.05058	-3.16878
2	0	0	8.68	9.60819	198.6	-9.10797	-3.05978
3	0	0	17.36	9.36374	198.1	-8.90069	-2.90815
4	0	0	26.04	8.88406	197.7	-8.46287	-2.70304
5	0	0	34.72	8.18234	197.4	-7.80818	-2.44601
6	0	0	43.4	7.27341	197.1	-6.95123	-2.14077
7	0	0	52.08	6.17424	196.9	-5.90845	-1.79206
8	0	0	60.76	4.90263	196.7	-4.697	-1.40497
9	0	0	69.44	3.47343	196.5	-3.33122	-.983718
10	0	0	78.12	1.88688	196.3	-1.81136	-.528452
END	0	0	86.8	0	0	0	0
GND	4.97193	94.8698	0 Twr 2	13.7065	1.	13.7044	.237176
12	4.97193	94.8698	8.99	13.7572	.6	13.7564	.145786
13	4.97193	94.8698	17.98	13.4182	.3	13.4179	.0809865
14	4.97193	94.8698	26.97	12.7339	.1	12.7339	.0285272
15	4.97193	94.8698	35.96	11.725	359.9	11.725	-.0129005
16	4.97193	94.8698	44.95	10.4148	359.8	10.4147	-.0431547
17	4.97193	94.8698	53.94	8.82963	359.6	8.82941	-.06168
18	4.97193	94.8698	62.93	6.99798	359.4	6.99765	-.0678137
19	4.97193	94.8698	71.92	4.94456	359.3	4.94419	-.0608473
20	4.97193	94.8698	80.91	2.67418	359.1	2.67388	-.0397914
END	4.97193	94.8698	89.9	0	0	0	0
GND	9.94386	189.74	0 Twr 3	6.89649	239.1	-3.54128	-5.91785
22	9.94386	189.74	9.02	7.14233	238.	-3.78371	-6.05776
23	9.94386	189.74	18.04	7.10797	237.3	-3.83586	-5.98409
24	9.94386	189.74	27.06	6.85474	236.8	-3.75058	-5.73764
25	9.94386	189.74	36.08	6.3979	236.4	-3.53897	-5.32999
26	9.94386	189.74	45.1	5.75088	236.1	-3.20951	-4.77197
27	9.94386	189.74	54.12	4.92825	235.8	-2.77097	-4.07546
28	9.94386	189.74	63.14	3.9453	235.5	-2.23245	-3.25293
29	9.94386	189.74	72.16	2.81519	235.3	-1.60183	-2.31505
30	9.94386	189.74	81.18	1.53933	235.1	-.88022	-1.26284
END	9.94386	189.74	90.2	0	0	0	0
GND	19.8877	379.479	0	.372492	241.4	-.178257	-.32707
32	19.8877	379.479	8.7	.213405	241.5	-.101987	-.187457
33	19.8877	379.479	17.4	.104361	241.7	-.0494053	-.0919257
34	19.8877	379.479	26.1	.0194705	245.2	-8.15E-03	-.0176813
35	19.8877	379.479	34.8	.0446059	58.7	.0232011	.0380972
36	19.8877	379.479	43.5	.0884261	59.5	.0449233	.0761648
37	19.8877	379.479	52.2	.112283	59.5	.0569594	.0967636
38	19.8877	379.479	60.9	.116216	59.4	.059157	.100034
39	19.8877	379.479	69.6	.100172	59.2	.0512786	.0860514
40	19.8877	379.479	78.3	.0635667	59.	.032773	.054467
END	19.8877	379.479	87.	0	0	0	0

MoM Model Details - Daytime Directional Antenna Array Synthesis (7 of 7)

current no.	X	Y	Z	mag (amps)	phase (deg)	real (amps)	imaginary (amps)
GND	18.3642	309.105	0	.0168237	302.8	9.12E-03	-.0141362
42	18.3642	309.105	8.7	.058471	122.9	-.0317243	.0491164
43	18.3642	309.105	17.4	.0899535	122.9	-.048855	.0755303
44	18.3642	309.105	26.1	.0912706	123.	-.0496428	.0765893
45	18.3642	309.105	34.8	.0635167	123.	-.0346128	.0532572
END	18.3642	309.105	43.5	0	0	0	0
GND	-5.93764	261.653	0	.0196496	341.	.0185752	-6.41E-03
47	-5.93764	261.653	8.7	.0683342	161.1	-.0646373	.0221714
48	-5.93764	261.653	17.4	.105206	161.2	-.0995908	.0339117
49	-5.93764	261.653	26.1	.106839	161.4	-.101232	.0341551
50	-5.93764	261.653	34.8	.0744246	161.5	-.0705986	.0235555
END	-5.93764	261.653	43.5	0	0	0	0
GND	-24.8495	302.25	0	.0165937	306.3	9.83E-03	-.0133661
52	-24.8495	302.25	8.7	.057687	126.4	-.0341996	.0464562
53	-24.8495	302.25	17.4	.0887715	126.4	-.0526594	.0714658
54	-24.8495	302.25	26.1	.0900893	126.4	-.0534868	.072493
55	-24.8495	302.25	34.8	.0627001	126.5	-.0372672	.0504229
END	-24.8495	302.25	43.5	0	0	0	0
GND	35.214	271.133	0	.0187555	331.9	.0165426	-8.84E-03
57	35.214	271.133	8.66	.064927	152.	-.0573075	.0305182
58	35.214	271.133	17.32	.0999587	152.1	-.0883082	.0468339
59	35.214	271.133	25.98	.101489	152.2	-.0897613	.04736
60	35.214	271.133	34.64	.0706818	152.3	-.0625973	.0328252
END	35.214	271.133	43.3	0	0	0	0

MoM Model Details – Nighttime Directional Antenna Array Synthesis (1 of 7)

DAYTIME MEDIUM WAVE ARRAY SYNTHESIS FROM FIELD RATIOS

Frequency = 0.68 MHz

Tower	Field Ratio Magnitude	Phase (deg)
1	0.450	0.0
2	1.00E-05	0.0
3	1.000	0.0
4	0.556	0.0
5	1.00E-05	0.0
6	1.00E-05	0.0
7	1.00E-05	0.0
8	1.00E-05	0.0

VOLTAGES AND CURRENTS - rms

Source Node	Voltage Magnitude	Current Phase (deg)	Current Magnitude	Phase (deg)
1	147.489	323.9	5.166300	2.1
11	324.407	319.6	0.503086	50.9
21	330.659	15.3	10.650300	2.8
31	179.093	330.5	6.341150	2.2
41	182.803	317.1	0.148530	47.4
46	197.107	320.6	0.160168	51.0
51	180.709	310.3	0.147202	40.4
56	196.391	318.1	0.159231	48.3

Sum of square of source currents = 361.354
Total power = 5,000. watts

MoM Model Details – Nighttime Directional Antenna Array Synthesis (2 of 7)

TOWER ADMITTANCE MATRIX

admittance	real (mhos)	imaginary (mhos)
Y(1, 1)	0.0218009	-0.00741
Y(1, 2)	0.00065379	0.014258
Y(1, 3)	9.86E-05	-0.00178
Y(1, 4)	-0.0014468	0.000344
Y(1, 5)	8.64E-05	7.67E-06
Y(1, 6)	8.75E-05	2.54E-05
Y(1, 7)	9.55E-05	8.28E-06
Y(1, 8)	9.31E-05	2.16E-05
Y(2, 1)	0.00065462	0.014258
Y(2, 2)	0.00603517	-0.01237
Y(2, 3)	0.00396054	0.009461
Y(2, 4)	-0.0009059	-0.00312
Y(2, 5)	8.12E-07	0.000189
Y(2, 6)	-4.49E-05	0.000188
Y(2, 7)	-1.86E-06	0.000206
Y(2, 8)	-3.27E-05	0.000203
Y(3, 1)	9.85E-05	-0.00178
Y(3, 2)	0.00396038	0.009461
Y(3, 3)	0.0180007	-0.00704
Y(3, 4)	0.0117383	0.005549
Y(3, 5)	-0.0008054	-0.00051
Y(3, 6)	-0.0009767	-0.00093
Y(3, 7)	-0.0009195	-0.00049
Y(3, 8)	-0.0009762	-0.00082
Y(4, 1)	-0.0014467	0.000344
Y(4, 2)	-0.0009058	-0.00312
Y(4, 3)	0.0117381	0.00555
Y(4, 4)	0.0299878	0.004501
Y(4, 5)	-0.0006159	-0.00135
Y(4, 6)	-0.0007822	-0.00087
Y(4, 7)	-0.0008017	-0.00114
Y(4, 8)	-0.0007858	-0.00098

TOWER ADMITTANCE MATRIX

admittance	real (mhos)	imaginary (mhos)
Y(5, 1)	8.64E-05	7.67E-06
Y(5, 2)	8.17E-07	0.000189
Y(5, 3)	-0.0008053	-0.00051
Y(5, 4)	-0.0006159	-0.00135
Y(5, 5)	4.52E-05	0.003579
Y(5, 6)	5.15E-05	2.67E-05
Y(5, 7)	5.03E-05	2.16E-06
Y(5, 8)	5.30E-05	3.18E-06
Y(6, 1)	8.75E-05	2.54E-05
Y(6, 2)	-4.49E-05	0.000188
Y(6, 3)	-0.0009766	-0.00093
Y(6, 4)	-0.0007822	-0.00087
Y(6, 5)	5.15E-05	2.67E-05
Y(6, 6)	6.40E-05	0.003592
Y(6, 7)	6.56E-05	1.16E-05
Y(6, 8)	5.75E-05	8.94E-06
Y(7, 1)	9.55E-05	8.28E-06
Y(7, 2)	-1.86E-06	0.000206
Y(7, 3)	-0.0009195	-0.00049
Y(7, 4)	-0.0008017	-0.00114
Y(7, 5)	5.03E-05	2.16E-06
Y(7, 6)	6.56E-05	1.16E-05
Y(7, 7)	7.20E-05	0.003583
Y(7, 8)	5.28E-05	3.58E-05
Y(8, 1)	9.31E-05	2.16E-05
Y(8, 2)	-3.27E-05	0.000203
Y(8, 3)	-0.0009761	-0.00082
Y(8, 4)	-0.0007857	-0.00098
Y(8, 5)	5.30E-05	3.19E-06
Y(8, 6)	5.75E-05	8.95E-06
Y(8, 7)	5.28E-05	3.58E-05
Y(8, 8)	6.57E-05	0.003572

MoM Model Details – Nighttime Directional Antenna Array Synthesis (3 of 7)

TOWER IMPEDANCE MATRIX

impedance	real (mhos)	imaginary (mhos)
Z(1, 1)	35.6036	0.547378
Z(1, 2)	17.6231	-17.197
Z(1, 3)	-11.2498	-12.8395
Z(1, 4)	6.34419	6.87672
Z(1, 5)	-2.03021	3.77249
Z(1, 6)	-4.93627	1.25998
Z(1, 7)	-2.50757	3.57161
Z(1, 8)	-4.36536	2.08021
Z(2, 1)	17.6245	-17.1958
Z(2, 2)	38.2204	18.2619
Z(2, 3)	18.6546	-18.6317
Z(2, 4)	-9.37858	7.67616
Z(2, 5)	-5.10753	-2.96983
Z(2, 6)	-1.88504	-7.10714
Z(2, 7)	-4.90314	-3.50783
Z(2, 8)	-2.96289	-6.22434
Z(3, 1)	-11.2493	-12.8398
Z(3, 2)	18.6547	-18.6316
Z(3, 3)	40.3574	20.2964
Z(3, 4)	-10.4243	-12.7302
Z(3, 5)	3.82151	-8.02861
Z(3, 6)	10.314	-5.37355
Z(3, 7)	4.17251	-7.97529
Z(3, 8)	8.7203	-6.33322
Z(4, 1)	6.34419	6.87673
Z(4, 2)	-9.3785	7.67637
Z(4, 3)	-10.4248	-12.7299
Z(4, 4)	36.1562	1.35418
Z(4, 5)	10.1837	-5.00896
Z(4, 6)	3.54332	-7.69532
Z(4, 7)	7.85073	-6.46061
Z(4, 8)	5.0535	-7.38676

TOWER IMPEDANCE MATRIX

impedance	real (mhos)	imaginary (mhos)
Z(5, 1)	-2.03019	3.77249
Z(5, 2)	-5.10765	-2.9697
Z(5, 3)	3.82097	-8.02896
Z(5, 4)	10.1837	-5.00896
Z(5, 5)	5.67102	-284.608
Z(5, 6)	4.59588	-3.92875
Z(5, 7)	4.96507	-5.25936
Z(5, 8)	4.9569	-5.72777
Z(6, 1)	-4.93625	1.25996
Z(6, 2)	-1.8853	-7.10712
Z(6, 3)	10.3133	-5.37482
Z(6, 4)	3.54336	-7.69535
Z(6, 5)	4.59589	-3.92875
Z(6, 6)	5.66234	-284.578
Z(6, 7)	4.8944	-5.02392
Z(6, 8)	4.97284	-5.57071
Z(7, 1)	-2.50755	3.57162
Z(7, 2)	-4.90328	-3.5077
Z(7, 3)	4.17196	-7.97567
Z(7, 4)	7.8508	-6.46062
Z(7, 5)	4.96507	-5.25937
Z(7, 6)	4.8944	-5.02392
Z(7, 7)	5.63642	-284.518
Z(7, 8)	4.02842	-3.14022
Z(8, 1)	-4.36533	2.0802
Z(8, 2)	-2.96313	-6.22425
Z(8, 3)	8.71956	-6.33427
Z(8, 4)	5.05347	-7.38682
Z(8, 5)	4.95686	-5.7284
Z(8, 6)	4.97278	-5.5713
Z(8, 7)	4.02838	-3.1404
Z(8, 8)	5.55586	-286.323

MoM Model Details - Nighttime Directional Antenna Array Synthesis (4 of 7)

GEOMETRY: Wire coordinates in degrees; other dimensions in meters
Environment: perfect ground

wire	caps	Distance	Angle	Z	radius	segs
1	none	0	0	0	.231	10
		0	0	86.8		
2	none	95.	273.	0	.205	10
		95.	273.	89.9		
3	none	190.	273.	0	.25	10
		190.	273.	90.2		
4	none	380.	273.	0	.205	10
		380.	273.	87.		
5	none	309.65	273.4	0	.198	5
		309.65	273.4	43.5		
6	none	261.72	268.7	0	.198	5
		261.72	268.7	43.5		
7	none	303.27	265.3	0	.198	5
		303.27	265.3	43.5		
8	none	273.41	277.4	0	.198	5
		273.41	277.4	43.3		

Number of wires = 8 current nodes = 60

	minimum		maximum	
Individual wires	wire	value	wire	value
segment length	8	8.66	3	9.02
radius	5	.198	3	.25

ELECTRICAL DESCRIPTION: Frequencies (MHz)

	frequency		no. of	segment length (wavelengths)	
no.	lowest	step	steps	minimum	maximum
1	.68	0	1	.0240556	.0250556

MoM Model Details - Nighttime Directional Antenna Array Synthesis (5 of 7)

Sources:

source	node	sector	magnitude	phase	type
1	1	1	208.581	323.9	voltage
2	21	1	467.623	15.3	voltage
3	31	1	253.276	330.5	voltage

Lumped loads:

load	node	resistance (ohms)	reactance (ohms)	inductance (mH)	capacitance (uF)	passive circuit
1	11	0	644.66	0	0	0
2	41	0	7,594.9	0	0	0
3	46	0	7,594.9	0	0	0
4	51	0	7,594.9	0	0	0
5	56	0	7,594.9	0	0	0

IMPEDANCE normalization = 50.

source = 1; node 1, sector 1 (Tower 1 - East)

freq (MHz)	resist (ohms)	react (ohms)	imped (ohms)	phase (deg)	VSWR	S11 dB	S12 dB
.68	22.583	-17.806	28.758	321.7	2.5551	-7.1818	-.92238

source = 2; node 21, sector 1 (Tower 3 - West Central)

freq (MHz)	resist (ohms)	react (ohms)	imped (ohms)	phase (deg)	VSWR	S11 dB	S12 dB
.68	29.895	6.6286	30.621	12.5	1.7176	-11.566	-.31388

source = 3; node 31, sector 1 (Tower 4 - West)

freq (MHz)	resist (ohms)	react (ohms)	imped (ohms)	phase (deg)	VSWR	S11 dB	S12 dB
.68	23.239	14.535	27.41	328.	2.3775	-7.7899	-.79014

MoM Model Details - Nighttime Directional Antenna Array Synthesis (6 of 7)

CURRENT: rms Frequency: 0.68 MHz Input power: 5000. watts
Efficiency: 100. % coordinates in degrees

current no.	X	Y	Z	mag (amps)	phase (deg)	real (amps)	imaginary (amps)
GND	0	0	0 Twr 1	5.09206	2.2	5.08846	.191418
2	0	0	8.68	4.97502	1.3	4.97379	.110516
3	0	0	17.36	4.76817	.7	4.76784	.0557276
4	0	0	26.04	4.46376	.2	4.46374	.0132998
5	0	0	34.72	4.06534	359.7	4.0653	-.0185005
6	0	0	43.4	3.57911	359.4	3.57889	-.0402026
7	0	0	52.08	3.01276	359.	3.01231	-.0520368
8	0	0	60.76	2.3745	358.7	2.37388	-.0541736
9	0	0	69.44	1.67106	358.4	1.6704	-.0467464
10	0	0	78.12	.902221	358.1	.901733	-.0296511
END	0	0	86.8	0	0	0	0
GND	4.97193	94.8698	0	.497357	49.8	.320968	.379926
12	4.97193	94.8698	8.99	.280046	49.7	.181203	.213521
13	4.97193	94.8698	17.98	.132678	48.8	.0874444	.0997847
14	4.97193	94.8698	26.97	.0204731	35.5	.0166715	.0118831
15	4.97193	94.8698	35.96	.0636882	237.2	-.0345055	-.0535309
16	4.97193	94.8698	44.95	.118605	235.2	-.0676406	-.0974264
17	4.97193	94.8698	53.94	.146639	235.1	-.0839509	-.12023
18	4.97193	94.8698	62.93	.148745	235.3	-.0846593	-.122303
19	4.97193	94.8698	71.92	.125898	235.7	-.0709773	-.103984
20	4.97193	94.8698	80.91	.0784805	236.1	-.0437542	-.0651518
END	4.97193	94.8698	89.9	0	0	0	0
GND	9.94386	189.74	0 Twr 3	10.7214	2.8	10.7086	.523429
22	9.94386	189.74	9.02	10.6512	1.6	10.6471	.295722
23	9.94386	189.74	18.04	10.3211	.8	10.3202	.141724
24	9.94386	189.74	27.06	9.74611	.1	9.74608	.0225689
25	9.94386	189.74	36.08	8.93867	359.6	8.93842	-.06642
26	9.94386	189.74	45.1	7.9149	359.1	7.91389	-.126566
27	9.94386	189.74	54.12	6.69379	358.6	6.69192	-.158401
28	9.94386	189.74	63.14	5.29583	358.2	5.29334	-.162352
29	9.94386	189.74	72.16	3.73849	357.9	3.73591	-.138797
30	9.94386	189.74	81.18	2.02384	357.5	2.02194	-.0874865
END	9.94386	189.74	90.2	0	0	0	0
GND	19.8877	379.479	0 Twr 4	6.48725	2.5	6.48095	.285728
32	19.8877	379.479	8.7	6.35388	1.6	6.35125	.182555
33	19.8877	379.479	17.4	6.09911	1.	6.0981	.110908
34	19.8877	379.479	26.1	5.71634	.5	5.71608	.0540263
35	19.8877	379.479	34.8	5.21063	.1	5.21062	9.85E-03
36	19.8877	379.479	43.5	4.59023	359.7	4.59018	-.0221552
37	19.8877	379.479	52.2	3.86529	359.4	3.86506	-.0421531
38	19.8877	379.479	60.9	3.0466	359.1	3.04618	-.0502375
39	19.8877	379.479	69.6	2.14321	358.8	2.14271	-.0464867
40	19.8877	379.479	78.3	1.15539	358.5	1.15498	-.0307541
END	19.8877	379.479	87.	0	0	0	0

MoM Model Details - Nighttime Directional Antenna Array Synthesis (7 of 7)

current no.	X	Y	Z	mag (amps)	phase (deg)	real (amps)	imaginary (amps)
GND	18.3642	309.105	0	.0192551	46.1	.0133428	.0138827
42	18.3642	309.105	8.7	.0667024	226.3	-.0460927	-.0482149
43	18.3642	309.105	17.4	.102185	226.5	-.0703546	-.0741078
44	18.3642	309.105	26.1	.103125	226.7	-.0706663	-.0751062
45	18.3642	309.105	34.8	.0712995	227.1	-.0485723	-.0521953
END	18.3642	309.105	43.5	0	0	0	0
GND	-5.93764	261.653	0	.0207754	49.6	.0134678	.0158189
47	-5.93764	261.653	8.7	.0719673	229.8	-.0464952	-.0549316
48	-5.93764	261.653	17.4	.110241	230.	-.0709064	-.0844121
49	-5.93764	261.653	26.1	.111233	230.2	-.0711303	-.0855172
50	-5.93764	261.653	34.8	.0768784	230.6	-.0488067	-.0593986
END	-5.93764	261.653	43.5	0	0	0	0
GND	-24.8495	302.25	0	.0190942	39.3	.0147804	.0120884
52	-24.8495	302.25	8.7	.0662023	219.4	-.0511834	-.0419881
53	-24.8495	302.25	17.4	.101524	219.5	-.0783659	-.0645433
54	-24.8495	302.25	26.1	.102577	219.6	-.0790118	-.065415
55	-24.8495	302.25	34.8	.0710101	219.8	-.0545535	-.0454572
END	-24.8495	302.25	43.5	0	0	0	0
GND	35.214	271.133	0	.0207008	47.1	.0140899	.0151657
57	35.214	271.133	8.66	.0714341	227.2	-.0485032	-.0524431
58	35.214	271.133	17.32	.109528	227.4	-.0741324	-.080628
59	35.214	271.133	25.98	.110628	227.6	-.0745663	-.0817211
60	35.214	271.133	34.64	.0765602	227.9	-.051339	-.0567959
END	35.214	271.133	43.3	0	0	0	0

Derivation of Directional Antenna System "Antenna Monitor" Parameters

With the modeled directional antenna ground level complex voltage and current values for the sources located at ground level for each tower now having been derived for each pattern, WCAP circuit analysis calculations[5] were run to develop the current magnitude and phase information that will be present at the pertinent tower ATU reference point, where the TCT sampling devices are located. Since the current transformers and sampling lines are essentially identical, the antenna monitor ratios and phases corresponding to the theoretical parameters can be calculated and normalized directly from the modeled ATU currents for each pattern, as shown in the following tables.

Geometric Reference

KFEQ Tower 1 – "East" (FCC ASRN 1006053) is the array geometry reference for both patterns. All towers are referenced in distance and azimuth from this tower – no reference flags are set.

Electrical Reference

Pattern "electrical reference" towers were selected based upon the analysis results (highest current magnitude tower), which were consistent with the normalized corrected theoretical references. As such, for the daytime pattern, Tower 2 – "East-Central" (FCC ASRN 1006054) is designated as the daytime reference tower. Tower 4 – "West" (FCC ASRN 1006056) is detuned during normal daytime operation.

For the nighttime pattern, Tower 3 – "West-Central" (FCC ASRN 1006055) is designated as the reference tower. Tower 2 – "East-Central" (FCC ASRN 1006054) is detuned during normal nighttime operation.

[5] For the WCAP driven tower analysis, the same schematic diagrams and node nomenclature are employed as were described previously for the OC-self analysis. Specifically, KFEQ node 2 represents the ATU TCT reference point and KFEQ node 5 represents the tower feedpoint. Node 0 represents ground potential. The tower operating impedances were represented by complex loads from KFEQ node 5 to ground (R_{5-0}).

Daytime and Nighttime Directional Antenna System "Antenna Monitor" Parameters

Daytime Directional Antenna Monitor Operating Parameters

KFEQ Tower (and ASRN)	Modeled Current Pulse	Current Magnitude at Toroid	Current Phase at Toroid	Antenna Monitor	
				Ratio	Phase
1 – East (ASRN 1006053)	1	9.57854	199.424°	**0.700**	**-161.6°**
2 – East-Central (ASRN 1006054)	11	13.6770	1.066°	**1.000**	**0.0°**
3 – West-Central (ASRN 1006055)	21	6.8456	239.285°	**0.501**	**-121.7°**

Nighttime Directional Antenna Monitor Operating Parameters

KFEQ Tower (and ASRN)	Modeled Current Pulse	Current Magnitude at Toroid	Current Phase at Toroid	Antenna Monitor	
				Ratio	Phase
1 – East (ASRN 1006053)	1	5.10412	2.346°	**0.476**	**-0.6°**
3 – West-Central (ASRN 1006055)	21	10.7214	2.994°	**1.000**	**0.0°**
4 – West (ASRN 1006056)	31	6.5047	2.651°	**0.607**	**-0.3°**

The phasing and coupling systems for the authorized patterns were adjusted accordingly such that the antenna monitor phase and ratio indications were within 5% of the ratio values, and 3° of the phase values shown above, per the requirements of §73.62(a) of the Commission's Rules.

Survey Certification

Per the FCC's Public Notice of October 29, 2009 (DA 09-2340), licensed stations such as KFEQ, which are not proposing a change in the authorized theoretical patterns, are exempt from the provisions of Section 73.151(c)(1)(ix) of the Commission's Rules. Accordingly, a surveyor's certification is not included herewith.

Sampling System Measurements

Impedance and length measurements were made of the antenna monitor sampling system using a precision calibrated measurement system consisting of a *Hewlett-Packard* model 8753C network analyzer in conjunction with a *Tunwall Radio* directional coupler system and an *Electronic Navigation Industries* (ENI) Model 310 L RF amplifier. Analyzer calibration was field verified prior to each measurement using the procedures specified in the manufacturer's instruction manual using precision calibration standards and techniques.

The measurements were accomplished by looking into the antenna monitor ends of the sampling lines for two conditions – with and without the sampling lines connected to the sampling devices at the tower bases under open-circuited conditions.

The following table shows the frequency nearest the carrier frequency where resonance (zero reactance corresponding with low resistance) was found. As the length of a distortion-less transmission line is 180 electrical degrees at the difference frequency between adjacent frequencies of resonance, and frequencies of resonance occur at odd multiples of 90 degrees electrical length, the sampling line length at the resonant frequency below carrier frequency, which is the closest one to the carrier frequency in terms of the ratio of frequencies, was found to be 270 electrical degrees.

The electrical lengths at carrier frequency appearing in the following table were calculated by ratioing the frequencies in the customary fashion.

KFEQ Tower	Sampling Line Open-Circuited Resonance Nearest to 680 kHz	Sampling Line Ratio Calculated Electrical Length at 680 kHz	680 kHz Measured Impedance with Sampling Toroid (TCT) Connected
1 – East	886.39 kHz	345.2°	48.002 +j0.6125 Ω
2 – East Central	886.53 kHz	345.2°	48.209 +j0.7777 Ω
3 – West Central	886.60 kHz	345.1°	48.127 +j0.7949 Ω
4 – West	886.46 kHz	345.2°	47.857 +j0.8049 Ω

As shown, the sampling line lengths meet the Commission's requirement that they be equal in length within +/-1 electrical degree.

The characteristic impedance of the sampling lines was calculated using the following formula, where R_1 +jX_1 and R_2 +jX_2 are the measured impedances at the +45 and –45 degree offset frequencies, respectively:

$$Zo = \sqrt{\sqrt{R_1^2 + X_1^2} \bullet \sqrt{R_2^2 + X_2^2}}$$

KFEQ Tower	-45 Degree Offset Frequency (kHz)	-45 Degree Measured Impedance (Ohms)	+45 Degree Offset Frequency (kHz)	+45 Degree Measured Impedance (Ohms)	Calculated Characteristic Impedance (Ohms)
1 – East	443.2	4.5723 –j49.967	620.5	9.3809 +j51.389	51.20
2 – East Central	443.3	4.5801 –j49.967	620.6	9.3535 +j51.389	51.20
3 – West Central	443.3	4.5343 –j49.969	620.6	9.3145 +j51.279	51.14
4 – West	443.2	4.5859 –j49.787	620.5	9.3359 +j51.172	51.00

As shown, the sampling line measured characteristic impedances meet the Commission's requirement that they be equal within +/-2 ohms.

The *Delta Electronics, Inc.* TCT-3 toroidal transformers used for the station were calibrated by measuring their outputs with a common reference signal using a *Hewlett-Packard* 8753C network analyzer in a calibrated measurement system. They were placed side-by-side

with a conductor passing the reference signal through them. The outputs of the TCT-3 were fed into the A and B receiver inputs of the analyzer which was configured to measure the relative ratios and phases of their output voltages.

The following results were found for the carrier frequency, 680 kilohertz:

Tower	TCT Serial Number	Test 1 Ratio	Test 1 Phase	Test 2 Ratio	Test 2 Phase
1 – NW	17977	0.99982	+0.22797°	Reference	Reference
2 – SE	17978	Reference	Reference	--	--
3 – SW	17979	0.9991	+0.397°	--	--
4 – NW	17980	0.99985	+0.4078°	0.99963	+0.213°

Delta type TCT-3 toroidal transformers are rated for absolute magnitude accuracy of ±2% and absolute phase accuracy of ±2 degrees. As the maximum measured transformer-to-transformer variations between the three transformers were fractional amounts, they clearly provide far more accurate relative indications than could be the case assuming their rated accuracies.

The calibration of the *Potomac Instruments* Antenna Monitor (factory calibrated –new- on October 18, 2010) was also field verified.

Reference Point Field Strength Measurements

Reference field strength measurements on the adjusted nighttime directional antenna pattern were made using *Potomac Instruments* Model FIM-21, Serial Number 447, last factory calibrated November 14, 1978 and a *Potomac Instruments, Inc.* model FIM-4100, Serial Number 122, last calibrated on July 27, 2009. The calibration of the FIM-21 was field verified against the FIM-4100 and found to be in substantial agreement.

Measurement points were selected at three locations along the designated "monitored radials" and pattern maxima for both patterns as described in the following.

For the daytime mode of operation, the monitored radials are 67°, 180°, 206°, and 330°, and would customarily be included in a set of reference point measurements. However, FCC Staff has indicated that, due to pattern symmetry, there is no need to obtain measurements on the 67° and 180° radials, so these radial directions were omitted from the measurement series. The daytime main lobe radial of 273° was included as required.

Similarly, for the nighttime mode of operation, the monitored radials are 73.5°, 103°, 203.4°, 245°, 273° and 302°. However, FCC Staff has indicated that it is permissible to drop the measurements on the 203.4° and 273° radials, so these radial directions were omitted from the measurement series. The nighttime main lobe radials are 3° and 183°. Since FCC Staff agreed that it would be permissible to drop one of these radials due to symmetry, the 183° radial was dropped and the 3° main lobe was included.

The radial directions, measured field strengths, location descriptions, and GPS coordinates (with datum reference) for these reference points are shown in the following tables.

Daytime Pattern Reference Point Field Measurements

Reference Point Field Strength Measurements – 206° Day (Monitored Minima)

Date/Time	Point	Field Strength	GPS Coordinates NAD-83	Description
12/08/2010 12:34 PM	1	100.8 mV/m	39° 47' 42.1" 94° 49' 37.3"	Lovers Land & Colony Street
12/08/2010 12:40 PM	2	101.5 mV/m	39° 48' 02.9" 94° 49' 24.2"	3901 N 29th Street
12/08/2010 12:47 PM	3	77 mV/m	39° 47' 30.9" 94° 49' 44.0"	Eugene Field School

Reference Point Field Strength Measurements – 273° Day (Maxima)

Date/Time	Point	Field Strength	GPS Coordinates NAD-83	Description
12/08/2010 11:10 AM	1	292 mV/m	39° 49' 48.2" 94° 50' 36.5"	50 ft South of 2044 mailbox – Rd 380
12/08/2010 11:20 AM	2	232 mV/m	39° 49' 48.9" 94° 50' 53.5"	20400 Rd 379
12/08/2010 11:28 AM	3	229 mV/m	39° 49' 50.3" 94° 50' 38.9"	50 ft North of 20294 mailbox. K Highway on West side of road.

Daytime Pattern Reference Point Field Measurements (continued)

Reference Point Field Strength Measurements – 330° Day (Monitored Minima)

Date/Time	Point	Field Strength	GPS Coordinates NAD-83	Description
12/08/2010 11:42 AM	1	50 mV/m	39° 53' 48.7" 94° 51' 24.1"	East side of New 71 Highway, 1/10 mile South of bridge
12/08/2010 11:56 AM	2	47 mV/m	39° 53' 54.7" 94° 51' 29.5"	Rd 369, 75 yards West of bridge
12/08/2010 12:05 PM	3	84 mV/m	39° 51' 53.3" 94° 49' 58.0"	Rd 361, 100 yards from Highway DD

Nighttime Pattern Reference Point Field Measurements

Reference Point Field Strength Measurements – 3° Night (Maxima)

Date/Time	Point	Field Strength	GPS Coordinates NAD-83	Description
01/14/2011 11:06 AM	1	124 mV/m	39° 54' 04.1" 94° 48' 03.4"	Rd 344
01/14/2011 11:17 AM	2	180 mV/m	39° 52' 58.6" 94° 48' 06.7"	Rd 345
01/14/2011 11:21 AM	3	288 mV/m	39° 51' 54.2" 94° 48' 10.7"	Rd 348

Reference Point Field Strength Measurements – 73.5° Night (Monitored Minima)

Date/Time	Point	Field Strength	GPS Coordinates NAD-83	Description
12/08/2010 2:20 PM	1	10.05 mV/m	39° 50' 51.7" 94° 43' 27.4"	Rd 294
12/08/2010 2:31 PM	2	15.5 mV/m	39° 50' 36.3" 94° 44' 35.4"	Across from 19504 mailbox on W Hwy
12/08/2010 2:44 PM	3	27.2 mV/m	39° 50' 07.2" 94° 46' 37.2"	Rd 304, 100yards from Rd 305

Reference Point Field Strength Measurements – 103° Night (Monitored Minima)

Date/Time	Point	Field Strength	GPS Coordinates NAD-83	Description
12/08/2010 1:33 PM	1	42 mV/m	39° 49' 04.0" 94° 44' 35.1"	W Highway
12/08/2010 1:59 PM	2	4.7 mV/m	39° 48' 42.9" 94° 42' 37.2"	58th Road
12/08/2010 2:05 PM	3	4.5 mV/m	39° 48' 20.7" 94° 40' 40.3"	Cook Road at Z Highway

Reference Point Field Strength Measurements – 245° Night (Monitored Minima)

Date/Time	Point	Field Strength	GPS Coordinates NAD-83	Description
01/14/2011 12:17 PM	1	13.0 mV/m	39° 48' 56.6" 94° 50' 27.9"	South side of K Highway near 59 Highway
01/14/2011 12:40 PM	2	10.0 mV/m	39° 48' 39.2" 94° 51' 19.0"	5006 Amazonia Road
01/14/2011 12:47 PM	3	12.2 mV/m	39° 48' 49.2" 94° 50' 53.4"	Maxwell Road

Nighttime Pattern Reference Point Field Measurements (continued)

Reference Point Field Strength Measurements – 302° Night (Monitored Minima)

Date/Time	Point	Field Strength	GPS Coordinates NAD-83	Description
01/14/2011 11:53 AM	1	14.5 mV/m	39° 51' 12.0" 94° 51' 27.0"	Rd 375
01/14/2011 11:57 AM	2	8.2 mV/m	39° 51' 30.5" 94° 52' 02.0"	Rd 375 at the end of the bridge
01/14/2011 12:01 PM	3	11.8 mV/m	39° 51' 23.8" 94° 51' 51.2"	Rd 375

Direct Measurement of Power

Phasor Common point impedance measurements were made using a *Hewlett-Packard* model 8753C network analyzer in conjunction with a *Tunwall Radio* directional coupler system and an *Electronic Navigation Industries* (ENI) Model 310 L RF amplifier. Analyzer calibration was field verified prior to each measurement using the procedures specified in the manufacturer's instruction manual using precision calibration standards and techniques. The "as adjusted" common point impedance measurements were made at the phasor cabinet input jack adjacent to the common point current meter that is used to determine operating power. The results are as follows:

Mode	Common Point Resistance	Common Point Reactance
Directional - Daytime	53.0 Ω	+j31.1 Ω

Mode	Common Point Resistance	Common Point Reactance
Directional – Nighttime	53.0 Ω	-j31.1 Ω

The authorized directional power is 5 kW for both the day and night modes of operation. The common point input power of the nominal 5000 W (day and night) directional antenna system is 5400 watts. This value is obtained by applying the provisions of §73.51(b)(1) of the Commission's Rules, i.e. 5000 Watts x 1.08 = 5400 Watts. Accordingly, the currents for each mode of operation, found by the following calculation $(\text{Watts/Resistance})^{1/2}$ are:

Mode	Operating Power	Common Point Current
Directional - Daytime	5400 Watts	10.0939 (10.1) Amperes

Mode	Operating Power	Common Point Current
Directional – Nighttime	5400 Watts	10.0939 (10.1) Amperes

RF Exposure Evaluation

The operation of facility described herein will not result in the exposure of workers or the general public to levels of radio frequency radiation in excess of the limits specified in FCC Rule Section 1.1310. In particular, fences have been installed around the tower bases to restrict public access. The as-constructed fence distances are beyond those necessary to prevent electric and magnetic field exposure above the levels described in the Commission's Rules.

The minimum fence sizes were determined with reference to FCC OET Bulletin 65 (Edition 97-01). Interpolated values from the Supplement A tables can be employed to estimate the necessary "Distance for Compliance with FCC limits" at 680 kilohertz, for each tower using the MoM modeled base currents and drive point impedances, or actual measured values. In this instance, the interpolated fence values from Tables 1 and 2 of Supplement A of OET Bulletin 65 were used as a guideline.

Assuming the KESJ electrical tower heights of 82.13° and a maximum ("worst case") power at any tower of 5 kW, the minimum fence distance should be 2.6 meters. However, non-metallic fences were constructed about each tower base that come no closer than 2.74 meters to any tower surface. Based upon the above, it is believed that the Commission's RF exposure prevention requirements are met in that the fences limit public access to areas with fields that exceed the requirements of the Rules for this directional antenna operation. Further, the entire site is fenced, and all fence enclosure areas are posted with RF exposure warning signs on all fence sides.

With respect to worker safety, no work will be permitted that will endanger employees or subcontractors. Access to high exposure or shock/burn areas will be controlled and supervised by knowledgeable, responsible, station personnel. If it is necessary for workers to be inside the tower base fence enclosures for extended periods of time, the station may switch to low power nondirectional operation on alternative towers, or it may choose to temporarily terminate operation entirely while work is performed within the enclosures. No one will be permitted to climb an energized tower. It is therefore believed that the constructed facility is in full compliance with the FCC's requirements with regard to radio frequency energy exposure.

Satisfaction of CP Conditions of Collocated KESJ

Co-owned KESJ was constructed on the same parcel occupied by the KFEQ array. Although these stations are not physically diplexed together, the KESJ Construction Permit was subject to five Special Operating Conditions or restrictions, several of which related to the KFEQ operation. As was discussed in the recently filed KESJ *application for license*, all five Special Operating Conditions were met. *The conditions that are specifically related to KFEQ* are again discussed below for completeness of the record since these two radio stations are collocated.

KESJ Special Operating Condition 1 required that the KESJ Permittee submit a proof of performance as set forth in either Section 73.151(a) or 73.151(c) of the Rules before program tests (PTA) would be authorized. Accordingly, a proof of performance was conducted under the provisions of Section 73.151(c) of the Commission's Rules and filed with the station's Application for License. Compliance with the Commission's performance rules was demonstrated in that filing; Program test Authority was subsequently granted.

KESJ Special Operating Condition 3 required that, prior to the construction authorized in the KESJ CP, the permittee was to notify KFEQ, so that, if necessary it could determine operating power by a method described in Section 73.51(a)(1) or (d), and/or request temporary authority from the Commission in Washington, D.C. to operate with parameters at variance in order to maintain monitoring point field strengths within authorized limits. As discussed herein

(and in the KESJ filing), Station KFEQ is also licensed to the permittee of KESJ, and as such, the licensee of KFEQ was fully aware of the proposed KESJ construction. Further, the entire KFEQ array was reconstructed (including new towers, sample lines, transmission lines, antenna monitor) as part of the KESJ construction project.

This Method of Moments proof of performance was completed on the KFEQ antenna array following the completion of the construction and tuning authorized in the KESJ CP. The filing of this proof for KFEQ follows the filing of the KESJ application for license/proof-of-performance (see BMML-20110322ABY), and supports the statements made in the KESJ proof that the KFEQ array is operating properly following the KESJ construction. Further, Special Temporary Authority was requested and received from the FCC to operate KFEQ with parameters at variance during the construction (see BSTA-20101123ARJ). In particular, KFEQ is authorized under the STA to operate with substantially adjusted Method of Moments antenna parameters, as it is presently.

KESJ Special Operating Condition 3 also stated that the Permittee shall be responsible for installation and continued maintenance of detuning apparatus necessary to prevent adverse effects upon the radiation pattern of the AM station. This has been accomplished as part of the KFEQ re-build and KESJ construction.

KESJ Special Operating Condition 5 stated that, before program tests are authorized, sufficient data shall be submitted to show that adequate filters, traps and other equipment had been installed and adjusted to prevent interaction, intermodulation and/or generation of spurious radiation products which may be caused by "common usage of the same antenna system" by KESJ and KFEQ, and there shall be filed with the license application copies of a firm agreement entered into by the 2 stations involved clearly fixing the responsibility of each with regard to the installation and maintenance of such equipment.

In addition, field observations were to be made to determine whether spurious emissions exist and any objectionable problems resulting therefrom shall be eliminated. Finally, following construction, and prior to authorization of program test under the KESJ grant, KESJ and KFEQ were to each measure antenna or common point resistance and submit FCC Form 302 as application notifying the return to direct measurement of power. As part of the replacement RF system for KFEQ, and the new RF system for KESJ, filters and traps were factory installed within the equipment as necessary to prevent undesired interaction between the two stations.

It should be noted that the two facilities share the same parcel of land, but do NOT share antenna structures or the same antenna system. (No direct connections or diplexers are involved.) Only the buried wire copper ground radials are interconnected. Inasmuch as the two stations are commonly owned, licensed, and operated, a written agreement, as stipulated above, has not been drafted since it is not possible to enter into an agreement with one's self. However, in the event of a transfer of control (sale) to another entity, the licensee will draft such an agreement as required to provide clear lines of responsibility for each party with regard to the installation and maintenance of said filtering and trap equipment.

Regarding the required field observations to determine whether spurious emissions or objectionable interference problems exist, such measurements have been undertaken, were attached to the KESJ proof and application for license, and are also included with this proof-of-performance statement as **Attachment II** to provide complementary documentation. As shown therein, no instances of spurious emissions, harmonics, or unpermitted out of band emissions were observed.

Finally, **KESJ Condition 5** required that, following construction, and prior to authorization of KESJ's program tests, Stations KESJ and KFEQ were to have each measured antenna or common point resistance and submit FCC Form 302 applications notifying the return to direct measurement of power. FCC Form 302-AM (with appropriate antenna impedance measurements) was supplied as an attachment to the Statement for KESJ. FCC Form 302-AM

(with appropriate antenna impedance measurements) is supplied herewith for KFEQ, along with this proof-of-performance. Accordingly, it was felt that this Condition for KESJ was essentially satisfied.

Certification

These application materials have been prepared on behalf of *Eagle Communications, Inc.* by the undersigned or under his direction and are true and correct to the best of his knowledge and belief. Mr. Cavell's qualifications are a matter of record before the FCC.

Respectfully submitted,

Garrison C. Cavell
Cavell, Mertz & Associates, Inc.
7732 Donegan Drive, Manassas, Virginia 20109
703.392.9090; Facsimile 703.392.9559
E-Mail: gcavell@cavellmertz.com

Attachment I

SUPPLEMENT TO AN APPLICATION FOR STATION LICENSE
METHOD OF MOMENTS - PROOF OF PERFORMANCE
prepared for
Eagle Communications, Inc.
Station KFEQ St. Joseph, Missouri
680 kHz DA-2 5 kW-U

Copy of 1994 KFEQ License

This Attachment provides a copy of the last license (1994) for KFEQ and is supplied to document the applied for, granted, and licensed array geometry for this station (which differs from that shown in CDBS). This license also provides the latest antenna system theoretical parameters.

This license copy is provided to support a request for modification of the array description in CDBS, as discussed in the attached Engineering Statement. The attached Statement also requests that the 1994 theoretical parameters be normalized against the highest power tower for each mode.

FCC Form 352
May 1988

UNITED STATES OF AMERICA
FEDERAL COMMUNICATIONS COMMISSION

AM BROADCAST STATION LICENSE

File No. : BZ-941031AA
FAC ID: 34419
Call Sign : KFEQ

LICENSEE: KFEQ, Inc.

1. Community of License. . . : St. Joseph, Missouri

2. Transmitter location. . . . . : 5.5 miles north-northeast of St. Joseph, Missouri

North Latitude. . . . . : 39° 49' 43"
West Longitude . . . . . : 94° 48' 20"

3. Transmitter(s): Type Accepted. See Sections 73.1660, 73.1665 and 73.1670 of the Commission's rules)

4. Main Studio Location: *(See Section 73.1125)*
4305 Frederick Avenue
St. Joseph, Missouri

5. Remote control location
4305 Frederick Avenue
St. Joseph, Missouri

6. Antenna and ground system:
Attached

7. Obstruction marking and lighting specifications - FCC Form 715, paragraphs: 1, 3, 12 & 21.

8. Frequency. . . . . : 680 kHz

9. Nominal power (kW). . . . . : 5.0 Day 5.0 Night

Antenna input power (kW) :

5.4 Day ☐ Non-directional antenna : current 5.59 amperes: resistance 173 ohms.
☒ Directional antenna :

5.4 Night ☐ Non-directional antenna : current 5.59 amperes: resistance 173 ohms.
☒ Directional antenna :

10. Hours of operation : As in BR-635 (Unlimited)

11. Conditions. . . . . : --

Subject to the provisions of the Communications Act of 1934, as amended, subsequent Acts, Treaties, and Commission rules made thereunder, and further subject to conditions set forth in this license,[1] the LICENSEE is hereby authorized to use and operate the radio transmitting apparatus herein described for the purpose of broadcasting for the term ending 3 A.M. Local Time
February 1, 1997

The Commission reserves the right during said license period of terminating this license or making effective any change, or modification of this license which may be necessary to comply with any decision of the Commission rendered as a result of any hearing held under the rules of the Commission prior to the commencement of this license period.

The license is issued on the licensee's representation that the statements contained in the licensee's application are true and that the undertakings therein contained so far as they are consistent herewith, will be carried out in good faith. The licensee shall, during the term of this license, render such broadcasting service as will serve the public interest, convenience,or necessity to the full extent of the privileges herein conferred.

This license shall not vest in the licensee any right to operate the station nor any right in the use of the frequency designated in the license beyond the term hereof, nor in any other manner than authorized herein. Neither the license nor the right granted hereunder shall be assigned or otherwise transferred in violation of the Communications Act of 1934, as amended. This license is subject to the right f or control by the Government of the United States conferred by section 606 of the Communications Act of 1934, as amended.

EAL:rao

[1] This license consists of this page and pages 2, 3, 4 & 5

Dated: FEB 15 1995

FEDERAL COMMUNICATIONS COMMISSION

FCC Form 353-A
June 1980

File No.: BZ-941031AA **Call Sign:** KFEQ

1. **DESCRIPTION OF DIRECTIONAL ANTENNA SYSTEM**

No. and Type of Elements: Four uniform cross-section, guyed, series-excited, vertical radiators. Theoretical RMS: 685.58 mV/m at 1 km, night; 683.97 mV/m at 1 km, day. Augmented PTN RMS: 725.81 mV/m at 1 km, night; 733.69 mV/m at 1km, day. Q = 22.36, night; 29.97, day.

Height above Insulators: 100.6 m (82°)

Overall Height: 102.4 m

Spacing and Orientation: Tower 1, 2, and 3 spaced 116.6 m (95°) between adjacent towers. Tower 3 and 4 spaced 233.2 m (190°). Line of towers bears 93° true.

Non-Directional Antenna: None authorized.

Ground System consists of 120-91.4 m buried copper radials equally spaced plus a 7.3 m x 7.3 m copper ground screen under each tower.

2. **THEORETICAL SPECIFICATIONS**

Towers:		E(#1)	EC(#2)	WC(#3)	W(#4)
Phasing:	Night:	0°	--	0°	0°
	Day:	-19.5°	142.9°	19.5°	--
Field Ratio:	Night:	0.81	--	1.80	1.0
	Day:	1.26	1.868	1.0	--

3. **OPERATING SPECIFICATIONS**

Phase Indication*:

Night:	4.0°	--	0°	-3.0°
Day:	169.0°	0°	-127.0°	--

Antenna Base Current Ratio:

Night:	0.54	--	1.0	0.488
Day:	.722	1.0	0.476	--

Antenna Monitor Sample Current Ratio:

Night:	0.56	--	1.0	0.479
Day:	0.735	1.0	0.498	--

* **As indicated by** Potomac Instruments AM-19 (204) Antenna Monitor.
Antenna sampling system approved under Section 73.68 (b) of the Rules.

File No: BZ-941031AA **Call Sign:** KFEQ

DESCRIPTION OF AND FIELD INTENSITY AT MONITORING POINTS:

Direction of 67° True North. Start from the transmitter driveway and US Highway 71 (Belt Highway). Proceed south on US-71, 1.75 miles to the junction of US-169. Turn left and proceed on US-169 Northeast for 2.75 miles to the intersection of Castle Road. Turn right (east) and travel 1 mile to the "Y" at the end of the road. Turn left (north) and proceed .10 mile, taking road just past wooden bridge across creek. Reading is taken from center of road. This is point number 9 on the N. 67°E. radial which is 1.89 miles away from the antenna. The field intensity measured at this point should not exceed 192.3 mV/m, day.

Direction of 180° True North. Start from the transmitter driveway and US Highway 71 (Belt Highway). Proceed south on US-71 for 3.75 miles to intersection of Frederick Boulevard. Turn right (west) on Frederick Boulevard and proceed .25 miles west to Woodson Loop on the grounds of the State Hospital. Enter the loop on the west side and take the right turn onto Panttiere. Proceed to the driveway at the rear of the three story building on south side of Panttiere. Reading is taken on yard at midpoint between the building and Frederick Avenue to the north. This is point number 12 on the N. 180° E. radial which is 3.51 miles away from the antenna. The field intensity measured at this point should not exceed 95.5 mV/m, day.

Direction of 206° True North. Start from the transmitter driveway and US Highway 71 (Belt Highway). Proceed south on US-71 Highway two miles, just past US-169, to Ashland Avenue. Turn right (west) on Ashland two blocks to blinking yellow light at intersection of Lover's Lane. Turn right (west) and proceed on Lover's Lane for 1 mile to 4 way stop at 22nd Street. Turn left (south) and proceed two blocks to Marion Street. Turn right one block to Eugene Field Avenue. Turn left (south) and proceed 1/3 block to third house on right. 2110 Eugene Field Avenue. Reading is taken on east side of street opposite the front door of this house. This is point number 10 on the N 206° E radial which is 3.19 miles away from the antenna. The field intensity measured at this point should not exceed 100.3 mV/m, day.

Direction of 330° True North. Start from the transmitter driveway and US Highway 71 (Belt Highway). Proceed north on US-71 .2 miles to intersection of US-59 Highway. Turn left and proceed southwest on US-59 1 mile to intersection of State Road "DD". Turn right on "DD" and proceed north approximately 3 miles to gravel road on left. Turn left (west) and proceed .2 miles to a point where creek to south has eroded close to road. This point is also halfway between the fourth and fifth utility poles from State Road "DD". Reading is taken in the center of the gravel road. This is point number 8 on the N 330° E radial which is 2.95 miles away from the antenna. The field intensity measured at this point should not exceed 87.7 mV/m, day.

File No: BZ-941031AA **Call Sign:** KFEQ

DESCRIPTION OF AND FIELD INTENSITY AT MONITORING POINTS:

Direction of 73.5° True North. Start from the transmitter driveway and US Highway 71 (Belt Highway). Proceed south on US-71 for 1.75 miles to the junction of US-169. Turn left and proceed on US-169 Northeast for 2.75 miles to the intersection of Castle Road. Turn right (east) and travel 1 mile to "Y" at the end of the road. Turn right (south) and proceed .1 mile south to dirt road that is to the left. The point is .05 miles down this road (east) adjacent to white outbuilding on farmland to the South. Reading is taken from the center of the road. This is point number 3 on the N 73.5° E radial which is 1.8 miles away from the antenna. The field intensity measured at this point should not exceed 23.7 mV/m, night.

Direction of 103° True North. Start from the transmitter driveway and US Highway 71 (Belt Highway). Proceed south on US-71 for 1.75 miles to the junction of US-169. Turn left and proceed on US-169 northeast for 1.75 miles to intersection of Andrew County Road 307. Proceed right (east) on County Road 307 two miles to County Road 304. Turn left (north) .05 miles to large post at end of fence, also at the crest of a small hill. Reading is taken in center of road. This is point number 3 on the N 103° E radial which is 1.73 miles from the antenna. The field intensity measured at this point should not exceed 51.7 mV/m, night.

Direction of 203.4° True North. Start from the transmitter driveway and US Highway 71 (Belt Highway). Proceed south on US-71 two miles, just past US-169, to Ashland Avenue. Turn right (west) on Ashland two blocks to blinking yellow light at intersection of Lover's Lane. Turn right (west) and proceed on Lover's Lane for 2.2 miles to intersection of Jones Street. This is one block past a large school on left (east) side of street. At Jones Street, turn left (east) and proceed 1/3 block to house at 1812 Jones Street. Reading is taken in center of street in front of this house. This is point number 11 on the N 203.4° E radial which is 3.9 miles away from the antenna. The field intensity measured at this point should not exceed 160 mV/m, night.

Direction of 245° True North. Start from the transmitter driveway and US Highway 71 (Belt Highway). Proceed north on US-71 .2 miles to intersection of US-59 Highway. Turn left and proceed southwest on US-59 for 2 miles to intersection of State Road "K". Turn right (northwest) and proceed .1 miles to a hollow on right side of road, adjacent to driveway marked as "5601 K Highway." Reading is taken on northeast side of "K" Highway in center of hollow. This is point number 6 on the N 245° E radial which is 1.89 miles away from the antenna. The field intensity measured at this point should not exceed 14.3 mV/m, night.

Direction of 273° True North. Start from the transmitter driveway and US Highway 71 (Belt Highway). Proceed north US-71 .2 miles to intersection of US-59 Highway. Turn left and proceed Southwest on US-59 for 1 mile to intersection of State Road "DD". Turn right on DD and immediately cross west to gravel road, Andrew County Road 381. Proceed on County Road 381 .05 mile to driveway of house on north side of road. Reading is taken in center of road by driveway and mailbox. This is point number 4 on the N 273° E radial which is 1.45 miles away from the antenna. The field intensity measured at this point should not exceed 11.2 mV/m, night.

File No: BZ-941031AA **Call Sign:** KFEQ

DESCRIPTION OF AND FIELD INTENSITY AT MONITORING POINTS:

Direction of 302° True North. Start from the transmitter driveway and US Highway 71 (Belt Highway). Proceed north on US-71 .2 miles to intersection US-59 Highway. Turn left and proceed across US-59 to Ridgeland Road. Proceed west on Ridgeland .6 miles to the St. Joseph country Club main parking lot. There is a blacktop road proceeding north from this lot to maintenance building on north side of property. Proceed on this road to a point half-way between the creek at the bottom of the hill and the road north of the maintenance building. Reading is taken in center of service road just south of gravel parking area. This is point number 1 on the N 302° E radial which is 1.0 miles away from the antenna. The field intensity measured at this point should not exceed 56 mV/m, night.

Attachment II

SUPPLEMENT TO AN APPLICATION FOR STATION LICENSE
METHOD OF MOMENTS - PROOF OF PERFORMANCE
prepared for
Eagle Communications, Inc.
Station KFEQ St. Joseph, Missouri
680 kHz DA-2 5 kW-U

Spurious Emissions Testing

This Attachment will serve to document the installation of filters and traps at the KFEQ/ KESJ common site as well as the subsequent, post-construction, harmonic, spurious emission and intermodulation interference measurements. As will be shown herein, no objectionable effects were observed.

680 kHz "reject" filters were installed at the base of each KESJ tower. They were measured from the filter cabinet output j-plug back toward the ATU networks with a 50 ohm termination to ground at the ATU output j-plug to confirm proper adjustment and operation. The measurements are as follows: 680 kHz reject 1550 kHz pass circuits were:

	680 kHz	1550 kHz
T1	121 ohms +j 1464.3 ohms	50.125 ohms -j 0.55 ohm
T2	128 ohms +j 1511.2 ohms	50.200 ohms -j 0.01 ohm
T3	121 ohms +j 1487.2 ohms	50.187 ohms -j 0.27 ohm
T4	126 ohms +j 1478.9 ohms	50.118 ohms -j 0.32 ohm

The 680 kHz shunt trap to ground between the KESJ antenna system and the KESJ transmitter measured 0 ohm +/-j 0 ohm at 680 kHz. The 1550 kHz shunt trap to ground between the KFEQ antenna system and the KFEQ transmitter measured 0 ohm +/-j 0 ohm at 1550 kHz. Additionally, filters and traps are installed in the phasor cabinet prior to the common point.

Intermodulation product frequencies were calculated for specific observations, through the third harmonic, as follows:

870, 1060, 1360 (KMRN), 1740, 2040, 2230, 2420,
2610, 2910, 3100, 3290, 3590, 3780, and 3970 kilohertz.

Attachment II (continued)

SUPPLEMENT TO AN APPLICATION FOR STATION LICENSE
prepared for
Eagle Communications, Inc.
Station KFEQ St. Joseph, Missouri
680 kHz DA-2 5 kW-U

Observations and measurements were made with an *Anritsu* Model 2721A spectrum analyzer and a *Chris Scott* magnetic loop antenna. The measurement observation location was 1.25 km distant on bearing 319 degrees True, from the approximate center of both KFEQ and KESJ arrays. The specific location is on John Glenn Drive, at the west end of the gravel parking lot of the fire station.

Measurements were made with both stations operating in various combinations of Daytime and Nighttime modes for both stations. The analyzer reports/plots follow this narrative and show no evidence of undesired emissions being emitted by the collocated stations.

In addition to the spectrum analyzer measurements, field strength measurements were made with a *Potomac Instruments* Model 4100 Field Strength Meter, Serial #122, factory calibrated on 07/27/2009. In particular, measurements were made at each of the above listed intermod frequencies as well as harmonic frequencies. Observed values were found to be near zero microvolts/meter and were simply noise, with the exception of 1360 kHz (twice the KFEQ licensed frequency), which was the carrier for KMRN, Cameron, Missouri (located 53.6 km distant at 108.6 degrees True). No audio was detectable on any intermod or harmonic frequency.

Accordingly, it is believed that KFEQ and KESJ (under its present Program Test Authority) are operating in full accordance with the Rules and Regulations of the Federal Communications Commission with respect to prohibited RF out-of-band emissions.

Spectrum Analyzer Data

kesj_lo-third (2/7/2011 3:12:35 PM)

Spectrum Analyzer

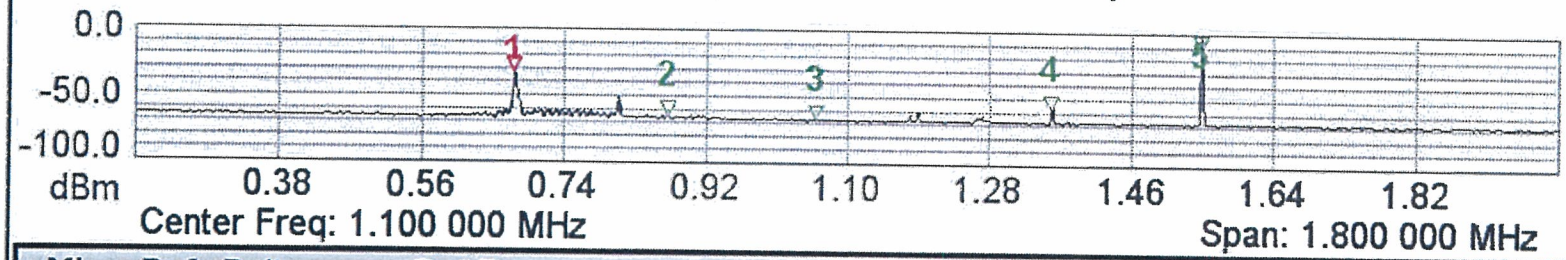

Mkr	Ref	Delta	Ref Freq	Ref Amp	Delta Freq	Delta Amp
1	■	□	**677.818 2 kHz**	**-32.181015015 dBm**	- -	- -
2	■	□	870.909 1 kHz	-64.680000305 dBm	- -	- -
3	■	□	1.060 0 MHz	-66.531997681 dBm	- -	- -
4	■	□	1.358 2 MHz	-58.170280457 dBm	- -	- -
5	■	□	1.548 4 MHz	-0.306009889 dBm	- -	- -
6	□	□	- -	- -	- -	- -

Trace Mode = Average	VBW = 3.0 MHz	Operator Name =
Trace Average = 100	Detection = Sample	Tower =
Trace Mode = Average	Center Frequency = 1.100 000 MHz	Serial Number = 623020
Preamp = ON	Start Frequency = 200.000 000 kHz	Base Ver. = V1.78
Min Sweep Time = 5E-05 S	Stop Frequency = 2.000 000 MHz	App Ver. = V1.79
Reference Level Offset = -75.5 dB	Frequency Span = 1.800 000 MHz	Date = 2/7/2011 3:12:35 PM
Input Attenuation = 0.0 dB	Reference Level = -75.500 dBm	Device Name = Willoughby-Voss
RBW = 300.0 Hz	Scale = 10.0 dB/div	

Spectrum Analyzer Data

kesj_mid-third (2/7/2011 3:18:32 PM)

Spectrum Analyzer

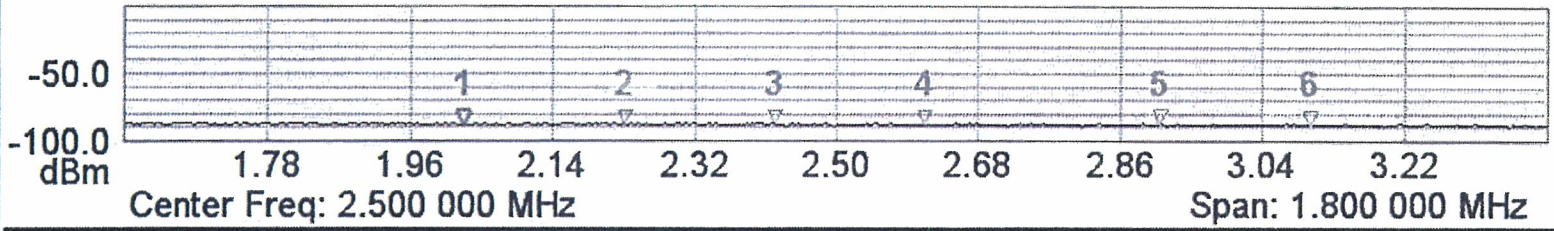

Mkr	Ref	Delta	Ref Freq	Ref Amp	Delta Freq	Delta Amp
1	■	□	2.028 7 MHz	**-87.847999573 dBm**	- -	- -
2	■	□	2.231 6 MHz	-87.974975586 dBm	- -	- -
3	■	□	2.421 5 MHz	-87.772956848 dBm	- -	- -
4	■	□	2.611 3 MHz	-87.9529953 dBm	- -	- -
5	■	□	2.909 1 MHz	-87.338996887 dBm	- -	- -
6	■	□	3.098 9 MHz	-88.159988403 dBm	- -	- -

Trace Mode = Average	VBW = 3.0 MHz	Operator Name =
Trace Average = 100	Detection = Sample	Tower =
Trace Mode = Average	Center Frequency = 2.500 000 MHz	Serial Number = 623020
Preamp = ON	Start Frequency = 1.600 000 MHz	Base Ver. = V1.78
Min Sweep Time = 5E-05 S	Stop Frequency = 3.400 000 MHz	App Ver. = V1.79
Reference Level Offset = -55.6 dB	Frequency Span = 1.800 000 MHz	Date = 2/7/2011 3:18:32 PM
Input Attenuation = 0.0 dB	Reference Level = -55.600 dBm	Device Name = Willoughby-Voss
RBW = 300.0 Hz	Scale = 10.0 dB/div	

Spectrum Analyzer Data

kesj_hi-third (2/7/2011 3:23:00 PM)

Spectrum Analyzer

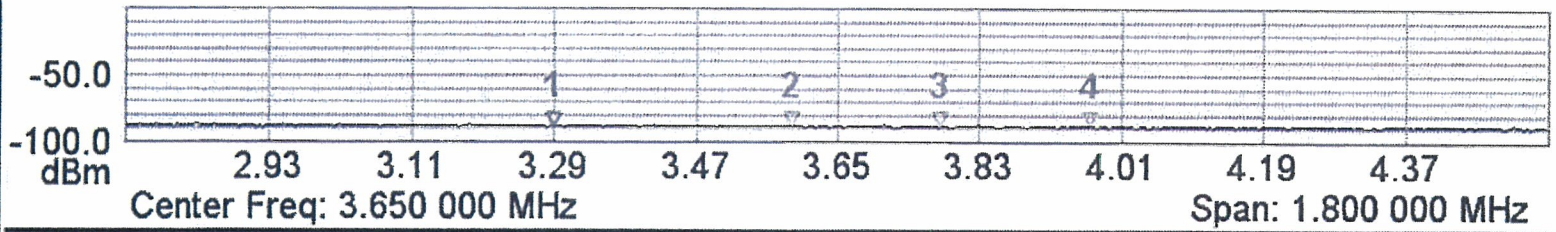

Mkr	Ref	Delta	Ref Freq	Ref Amp	Delta Freq	Delta Amp
1	■	□	3.290 0 MHz	-88.457992554 dBm	- -	- -
2	■	□	3.591 1 MHz	-88.259002686 dBm	- -	- -
3	■	□	3.780 9 MHz	-88.401008606 dBm	- -	- -
4	■	□	3.970 7 MHz	-87.773994446 dBm	- -	- -
5	□	□	- -	- -	- -	- -
6	□	□	- -	- -	- -	- -

Trace Mode = Average	VBW = 3.0 MHz	Operator Name =
Trace Average = 100	Detection = Sample	Tower =
Trace Mode = Average	Center Frequency = 3.650 000 MHz	Serial Number = 623020
Preamp = ON	Start Frequency = 2.750 000 MHz	Base Ver. = V1.78
Min Sweep Time = 5E-05 S	Stop Frequency = 4.550 000 MHz	App Ver. = V1.79
Reference Level Offset = -55.6 dB	Frequency Span = 1.800 000 MHz	Date = 2/7/2011 3:23:00 PM
Input Attenuation = 0.0 dB	Reference Level = -55.600 dBm	Device Name = Willoughby-Voss
RBW = 300.0 Hz	Scale = 10.0 dB/div	

Spectrum Analyzer Data

kesj_nite_lo-third (2/7/2011 3:31:47 PM)

Spectrum Analyzer

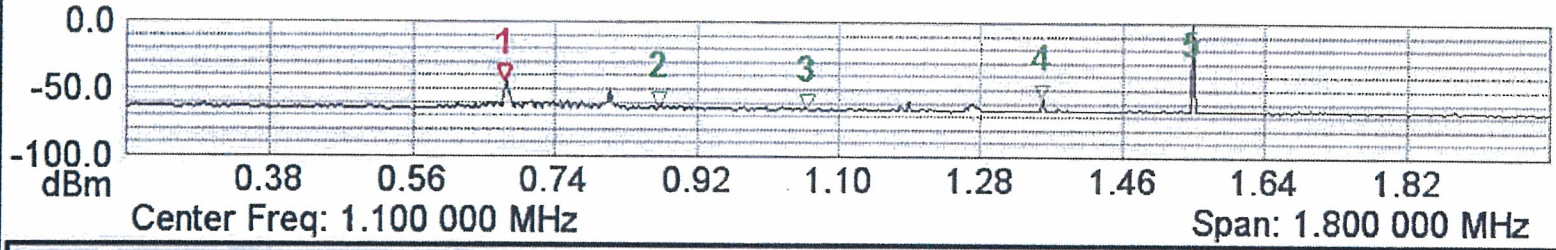

Mkr	Ref	Delta	Ref Freq	Ref Amp	Delta Freq	Delta Amp
1	■	□	**677.818 2 kHz**	**-43.135009766 dBm**	- -	- -
2	■	□	870.909 1 kHz	-63.5000 dBm	- -	- -
3	■	□	1.060 0 MHz	-65.064544678 dBm	- -	- -
4	■	□	1.358 2 MHz	-56.22328186 dBm	- -	- -
5	■	□	1.547 3 MHz	-22.126893997 dBm	- -	- -
6	□	□	- -	- -	- -	- -

Trace Mode = Average	VBW = 3.0 MHz	Operator Name =
Trace Average = 100	Detection = Sample	Tower =
Trace Mode = Average	Center Frequency = 1.100 000 MHz	Serial Number = 623020
Preamp = ON	Start Frequency = 200.000 000 kHz	Base Ver. = V1.78
Min Sweep Time = 5E-05 S	Stop Frequency = 2.000 000 MHz	App Ver. = V1.79
Reference Level Offset = -77.3 dB	Frequency Span = 1.800 000 MHz	Date = 2/7/2011 3:31:47 PM
Input Attenuation = 0.0 dB	Reference Level = -77.300 dBm	Device Name = Willoughby-Voss
RBW = 300.0 Hz	Scale = 10.0 dB/div	

Spectrum Analyzer Data

kesj_nite_mid-third (2/7/2011 3:35:22 PM)

Spectrum Analyzer

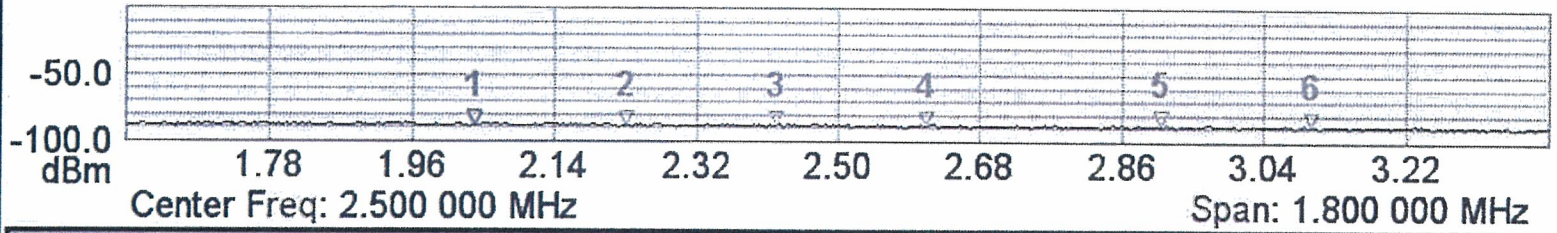

Mkr	Ref	Delta	Ref Freq	Ref Amp	Delta Freq	Delta Amp
1	■	□	**2.038 5 MHz**	**-87.944000244 dBm**	- -	- -
2	■	□	2.231 6 MHz	-88.025993347 dBm	- -	- -
3	■	□	2.421 5 MHz	-87.636001587 dBm	- -	- -
4	■	□	2.611 3 MHz	-87.823989868 dBm	- -	- -
5	■	□	2.909 1 MHz	-86.926063538 dBm	- -	- -
6	■	□	3.098 9 MHz	-87.960998535 dBm	- -	- -

Trace Mode = Average	VBW = 3.0 MHz	Operator Name =
Trace Average = 100	Detection = Sample	Tower =
Trace Mode = Average	Center Frequency = 2.500 000 MHz	Serial Number = 623020
Preamp = ON	Start Frequency = 1.600 000 MHz	Base Ver. = V1.78
Min Sweep Time = 5E-05 S	Stop Frequency = 3.400 000 MHz	App Ver. = V1.79
Reference Level Offset = -55.6 dB	Frequency Span = 1.800 000 MHz	Date = 2/7/2011 3:35:22 PM
Input Attenuation = 0.0 dB	Reference Level = -55.600 dBm	Device Name = Willoughby-Voss
RBW = 300.0 Hz	Scale = 10.0 dB/div	

Spectrum Analyzer Data

kesj_nite_hi-third (2/7/2011 3:41:40 PM)

Spectrum Analyzer

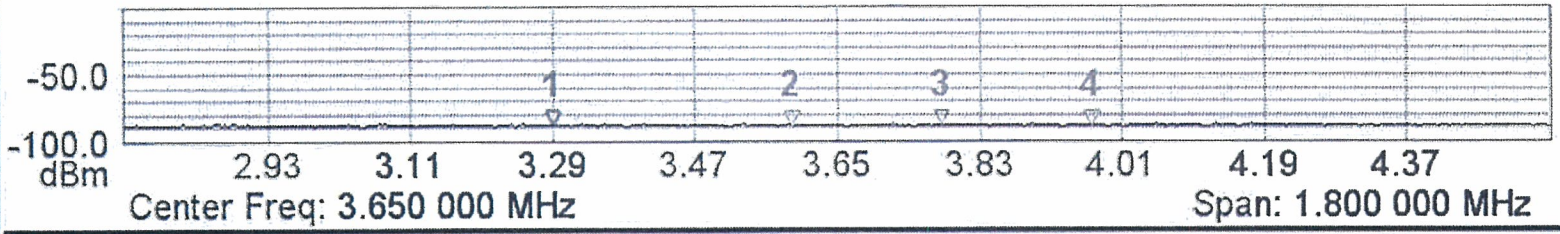

Mkr	Ref	Delta	Ref Freq	Ref Amp	Delta Freq	Delta Amp
1	■	□	3.290 0 MHz	**-87.784004211 dBm**	- -	- -
2	■	□	3.591 1 MHz	-88.364997864 dBm	- -	- -
3	■	□	3.780 9 MHz	-87.793006897 dBm	- -	- -
4	■	□	3.970 7 MHz	-88.09198761 dBm	- -	- -
5	□	□	- -	- -	- -	- -
6	□	□	- -	- -	- -	- -

Trace Mode = Average	VBW = 3.0 MHz	Operator Name =
Trace Average = 100	Detection = Sample	Tower =
Trace Mode = Average	Center Frequency = 3.650 000 MHz	Serial Number = 623020
Preamp = ON	Start Frequency = 2.750 000 MHz	Base Ver. = V1.78
Min Sweep Time = 5E-05 S	Stop Frequency = 4.550 000 MHz	App Ver. = V1.79
Reference Level Offset = -55.6 dB	Frequency Span = 1.800 000 MHz	Date = 2/7/2011 3:41:40 PM
Input Attenuation = 0.0 dB	Reference Level = -55.600 dBm	Device Name = Willoughby-Voss
RBW = 300.0 Hz	Scale = 10.0 dB/div	