SHS Communications

Switching System Overview

PREFACE

1. Introduction

The following functional specification and system overview outlines and provides details describing the typical base system solution proposed by SHS to greater majority of its target market. The product described is a SHS 2000 Programmable Switch System capable of providing an interface layer between Customers, Carriers/Service Providers and third party networks and applications, providing the telephony interface for enhanced services.

2. Basic Programmable Switch Hardware Description:

The SHS Programmable Switch is comprised of the following components: LNX Switch, Application Processor, Database Server, Voice Response Unit and System Management Workstations. The system, based on an LNX programmable switch from Excel is controlled by a robust application or host server from VRU platform, both based on Telco-grade, 48V DC Intel architecture. The system is designed to provide very high levels of reliability and flexibility.

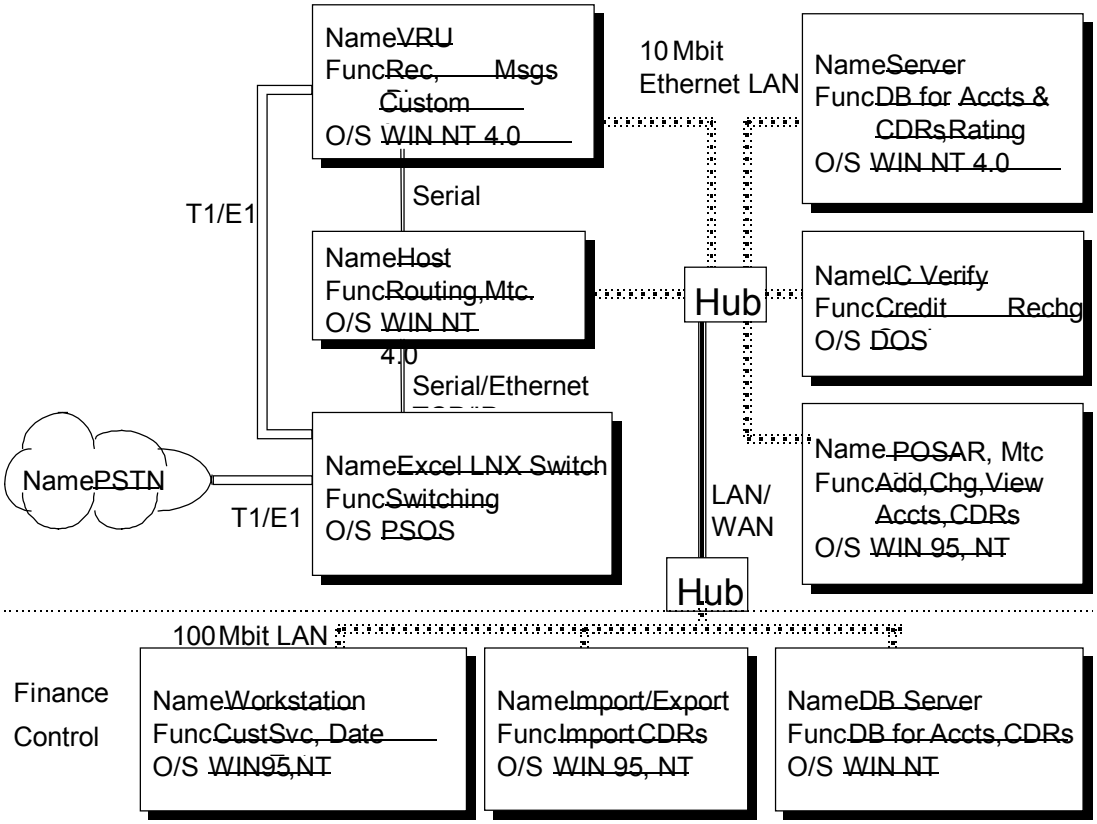

This document describes the functionality of SHS's SHS 2000 system. This system is typically comprised of:

- One Excel switch to route calls
- Two ADS Hosts to handle routing and signaling
- Two Servers for the following:
- Databases for CDRs, accounts, and rating
- Services, including PhoneCard, long distance resale, voicemail, one number service, international callback, prepaid cellular, and information services.
- Two VRUs for prompt play and recording and custom applications
- Components for the FinanceControl System Management software

TABLE OF CONTENTS

1.0 ADS Host Overview 5
2.0 PhoneCard System Overview 6
2.1 PhoneCard Feature Summary 7
3.0 Voice Response Unit Overview 9
3.1 Voicemail Overview 10
4.0 Long Distance Resale (LONG DISTANCE RESALE) System Overview 11
4.1LONG DISTANCE RESALE Feature Summary 12
5.0 Callback System Overview 15
5.1 Callback Feature Summary 16
5.2 Transparent Callback 19
5.2.1 System Overview 19
5.2.2 Transparent Callback Call Flow 19
6.0 POSAR: Point of Sale Activation and Recharge 22
6.1 POSAR Process 23
7.0 Billing/Accounting/System Management - FinanceControl 25
7.1 Planning Overview 25
7.2 Hardware 25
7.2.1 FC Server 26
7.2.2 Server Hard Disk 26
7.2.3 Server Network 27
7.2.4WorkStations 27
7.2.5 Printers 28
7.2.6 Modems 28
7.2.7 Bar Code Readers 29
7.2.8 Receipt Printers 29
7.2.9 Pole displays 29
7.3 Software Planning 30
7.3.1 Vendor Software 30
7.3.2 MICROSOFT FoxPro 30

7.3.4. Organizational Planning 30

8.0 Remote Maintenance Module 34
8.1 Overview 34
8.2 Call processing Capabilities 35
9.0 Cellular System Overview 36
9.1 Cellular Software 36
9.2 Rate Table Software 36
9.3 PhoneCard Software 36
9.4 Features 36
9.4.1 Land to Mobile 37
9.4.2 Mobile to Land 37
9.4.3 Mobile to Mobile 38
9.5 Customer Care 38
9.6 PhoneCard to MIN Transfer of funds 38
9.7 Fraud Control 39

1.0 ADS HOST SOFTWARE OVERVIEW

SHS uses the Application Development System (ADS) as host control software for the Excel programmable switch. The system can be used for Inter-Exchange Carriers, Concentrators, Debit Card, International Callback, Authorization Code Dialing, Fraud Control, and Private Networks.

The ADS Host software is multitasking with real time configuration capabilities. This system allows the user to configure, make changes, add, change, and customize new applications without disrupting in service applications. Configuration tables are saved on the system's hard drive and are used whenever the need occurs. ADS provides automatic boot startup, cold startup, and warm startup.

Several types of call routing capabilities are available in ADS. Basic call routing uses a digit matching process of dialed digits. Dialed digits are collected by means of input parameters and In-Seize Control for the Excel Switch. The system supports DTMF, MFR1, and MFR2 digit collection and generation as well as ISDN-PRI. Digit Translations are available for any number of digits received on the incoming call.

Enhanced call processing uses an API over an Ethernet network to provide control from external client-written applications and SHS applications.

SHS provides database server engine software operating under Windows NT. This software accesses specific databases for Call Back, Debit Card, Calling Card, and ANI Verification (for long distance resale). The server also performs real time rating functions. Client interfaces are also available for data entry. The API can also be accessed by software developers for the applications described above and to develop new applications.

The ADS Host provides the following features:

- Redundancy: The system is typically configured with two hosts. In the event that one host stops processing, the Excel switch will automatically recognize this and transfer host control to the backup host. Calls that are connected will stay up. Certain calls in process (E.g. the switch is gathering a PIN, etc.) will be disconnected and the caller must call again. A link is provided between the redundant hosts so that one host may be updated, and once testing completes, the updated configuration is transferred to the backup host by a simple menu option.
- Signaling configuration and translation: ISDN, DTMF, MFR1 and MFR2 signaling may be configured by trunk, for T1s and E1s. These signals may be converted any other, including between A-law and Mu-law. Also, simple onhooks and seizures may trigger events to be acted upon based upon the routing tables described previously. Refer to the ADS manual Appendices for inpulse & completion signaling protocols, and digit translation table examples (for both ANI and DNIS) that are presently supported. SHS as required can easily set up additional protocols. By utilizing Excel's PPL software, various "flavors" of T1, E1 and MF signaling can quickly be provided to meet any country's idiosyncratic signaling protocols.
- Maintenance: Trunks may be taken in and out of service, and may be monitored in real time. Alarm conditions produce audible alarms and are

written to log files. Real time debugging capabilities and debug logs allow for analysis of problems

2.0 PHONECARD SYSTEM OVERVIEW

PhoneCard, an optional module to ADS, offers a convenient, cashless alternative for callers without a regular long distance carrier or calling card. The PhoneCard application, in conjunction with ADS, provides Debit Account Call Processing functions. In addition, PhoneCard may be used as a calling card, with a maximum limit for fraud control.

All debit card functionality, account control, rating and management are incorporated into the database residing on the Server. Debit Cards/Accounts are issued to Subscribers allowing calling capabilities with real time debiting of the subscriber's account balance. When the amounts have been debited, no additional calls are allowed. The PhoneCard subscriber places a call from anywhere in the world to a predesigned telephone number; the system will answer and prompt the caller for an account code. The Server will validate the number and transfer key account information to the Host. The host then transfers the call, and the account information, to the VRU. The VRU then provides custom menuing capabilities to the caller (Refer to the VRU section for details). When the caller selects to make a call and enters a destination phone number, the database server will validate the call and determine how many minutes are available based upon the rate table associated with the account. If the time available during the call should reach a configurable value, a warning message is played to the caller only. When one minute is remaining during the call, the system plays an additional warning message, and warning tones play at 45, 30 and 15 seconds remaining. At 0 seconds remaining, the switch will automatically disconnect the caller. The system will automatically update the remaining credit balance once the call is completed. Configurable single-key or two-key-combinations may be pressed to reoriginate the call if a balance remains.

PhoneCard is a "network based" calling card where all data relating to the account and the card reside on a database server accessible over the network. There is no intelligence required on the card, making the card usable from any touch tone phone.

The PhoneCard system is optimized for service bureaus. The system provides for multiple companies running under a single platform. Prompts can be unique for each company, with up to 10,000 separate companies supported per system.

The system will support a "network marketing" approach with master records for each company, wholesale and retail billing, and rating,

2.1 PhoneCard Feature Summary

System Features

- VRU Integration: Refer to VRU section for details
- Re-origination Programmable Digit Length to Avoid Voice Mailbox Problems
- Two-digit Programmable Re-origination for International Callers
- Call Detail Records (CDR) in FoxPRO variant of Dbase
- Remote dialin to Server to perform all Client functions
- Integration with FinanceControl system management software

Account Features

- Dial One Card Option - Users of account will automatically transfer to a single number
- Programmable Routing by Company - Allows partitioning of calls, so that all calls out for that card will use a custom route list
- Speed Dial Option (up to 89 speed dial numbers per account)
- More Than One Simultaneous Users per Card (programmable option)
- Accounts Going Below Targeted Thresholds are logged to a Recharge log file
- Survey Activation - First time user of a card is automatically transferred to a number, specified by card. Second usage performs normally.
- Expiration - Can be set to a specific date, or to a configurable number of days from first usage.

Account Status Data

- Calls Active
- Previous Usage Since Counter Reset
- Last Call Date
- Activation Date

System Maintenance

- Bulk Loading of Accounts
  - Via all user definable fields
  - Log file for transaction errors
  - Validation with existing account records
- Batch Changing/Updating of Accounts
  - Via all user definable fields
  - Log file for transaction errors.

Billing and Rating

- Database applications use a common Rate Table Client module for setting and controlling billing and rating functions.
- Rate Tables are assigned for each card number
- Programmable Minimum and Incremental Billing Durations, in 6-second increments. First and additional increments set by account or destination number
- Programmable First Minute Rate and Duration in 6-second Increments (round up)
- Grace Period (incoming (A Leg) calls with no outgoing answer within the grace period are not billed
- Flexible Rate Plans per Card Number
  Day/Evening/Night/Weekend/Holiday for destination number
  Day/Evening/Night/Weekend/Holiday blocking for destination number
  Incremental surcharges based upon ANI

Rating based upon ANI and DNIS combination, to support intrastate billing
Flat Rate Billing and Free Calls.

- FinanceControl System Management: A full-featured billing system, "FC ," is available via an alliance with SHS Communications. The billing system utilizes the data from the server's Call Detail Records to generate real time billing; Use of the SHS System replaces the Client software for the PhoneCard application. This means that in addition SHS's PhoneCard functionality SHS Systems incorporates their own screen menu selections and functionality.
- Billing Alternatives: One separate database file is created for each company, all with identical database layouts. One CDR database is created per company, per period. Periods may be configured for monthly, weekly or daily, and overwrite old data after one year. The formats of these databases are provided, and may be used by the client to produce bills through custom programming or exporting to a billing service bureau.

PhoneCard Key Metrics

- Account or Card Numbers (up to 23 digits)
- Serial Numbers (up to 9 digits)
- Rate Tables (up to 500)
- Area/Country Codes (up to 1800) per Rate Table (1-9 digits per code
- 99 Languages are supported
- Base English Voice prompts are supplied, with the client providing custom prompts
- Unlimited users per Account or Card

Technical Note

All database files use a FOXPRO variant of DBase format. They are "opened shared" with FOXPRO indexes and record or file locking. Any user application that accesses the database must open the database files as "shared access" and must not keep a record

locked for more than a fraction of a second as the server may stall waiting for a lock to release.

3.0 VOICE RESPONSE UNIT OVERVIEW

SHS's Voice Response Unit (VRU) plays & records prompts and offers a number of custom applications. Typical SHS 2000 systems contain two redundant, load-sharing VRUs. These VRUs allow non-technical personnel to easily customize SHS's SHS 2000 PhoneCard and callback products. Users of these products may:

- select from multiple voice menus
- dial a domestic or international number
- dial up to 89 speed dial numbers
- hear a message
- transfer to information services and automated surveys
- enter voicemail (optional)
- password-protected recording and review of voice prompts
- automated credit card billing (optional)
- transfer the balance from one PhoneCard account to another of the same company code
- transfer the balance from one account to another of the same company code
- dial out to an other vendor's products connected to SHS's SHS 2000 switch
- The above functions may be free or billed to the owner's account
- customize call flow by card or groups of cards (up to 10,000 custom menus for PhoneCard and direct dial)
- customize voice prompts by card or group of cards (up to 10,000 sets of custom prompts for PhoneCard and direct dial)
- have the VRU parse out the dialed number to support international dialing conventions
- update up to 89 speed dial numbers
- Configure prompts play for 64K PCM, 32K ADPCM, or 24K ADPCM.
- reconfigure PhoneCard features, including language and speed dial numbers
- Configurable play balance and/or minutes remaining

3.1 VOICEMAIL OVERVIEW

SHS's Voicemail software resides on the same SHS 2000 VRU. It is tightly integrated with PhoneCards, with automatic setup and billing. The first time the PhoneCard subscriber selects voicemail, a box number is assigned and announced to the subscriber. Callers to a DID or 800 number will wait for an answer, then enter this box number. Callers dial a published generic number, then enter the PhoneCard voicemail box number (which is different from the secret account number), then hear a custom greeting and leave a message. The next time the subscriber signs on to the PhoneCard account, the system announces the number of new messages.
When the PhoneCard subscriber selects to enter Voicemail, the system automatically signs on to the subscriber's box. The subscriber may hear, delete, save, and forward messages, and is billed for all time in the system. One VRU performs all voicemail functions at a time, with a hot backup VRU, so although data is shared on a server, so if the primary VRU fails, the alternate VRU immediately takes over.

4.0 LONG DISTANCE RESALE (ANI/PIN) OVERVIEW

The Long Distance Resale System (ANI/PIN) is an optional module to ADS. Long Distance Resale is used to validate ANI and provide support for Long Distance Resale. Depending upon the ANI, it may also prompt for and validate a PIN for calling card applications. The system provides automated service to incoming 800 calls with DNIS and ANI, with DNIS and no ANI, and supports Feature Group 'D' trunks. Long Distance Resale can restrict accounts to certain area codes and international country codes. Daily, weekly, and monthly limits are available for each ANI. Basic fraud control checks can be easily automated. Calls are rated in real time and Call Detail Records are generated when the call is terminated.

Long Distance Resale may be configured in one of two ways:

- Specific trunks can be configured to automatically capture the ANI and destination number, and process them to automatically route calls.
- The callers can dial specific numbers, and the switch prompts for the ANI (and PIN if required) and destination number.

Calls received with a DNIS but no ANI are answered and the system may either play a tone or play a message from the VRU. Invalid ANIs may also handled either by either defaulting or examining the two Information Digits and automatically:

- placing the ANI in a negative database for a predetermined period of time, or indefinitely
- adding a new record with default values to the database, and letting the call go through
- transferring the call to an operator
- transferring the call to a VRU to play a custom message
- playing a reorder tone

The LONG DISTANCE RESALE system can be used for cellular services, charging for both for calls coming into the cellphone and out of the cellphone.

4.1 Long Distance Resale (ANI/PIN) Feature Summary

System Features

- Standard 1+ call support
- VRU Integration for informational messages
- Remote dialin to Server to perform all client functions
- Call Detail Records (CDR) in FoxPRO variant of Dbase
- Integration with FinanceControl system management software
- NPA/NXX/International Code Restrictions
- Multiple Customers/Accounts
- Security via PIN
- Usage Limits on a Day/Week/Monthly Basis (customer programmable)
- Fraud Control through Negative Database
- Branding on 800 Calls - Callers dial an 800 number, the system checks the ANI, then prompts the caller to enter the destination number.
- Filtering of new accounts by information digits

Account Features

- Programmable Routing by Company - Allows partitioning of calls, so that all calls out for that ANI will use a custom route list, thus specific groups of trunks
- Accounts Going Below Targeted Thresholds are logged to a Recharge log file

Account Status Data

- Number and Amount for the Day's Calls
- Number and Amount for the Week's Calls
- Number and Amount for the Month's Calls
- Date and time of last call made
- Date account first activated

Billing and Rating

- Credit Billing option allows usage up to daily, weekly, and monthly limits
- Debit Billing option allows usage up to daily, weekly, and monthly limits, and also limits total usage to value of the ANI account
- Master Record with Daily/Weekly/Monthly Limits and Usage
- Database applications use a common Rate Table Client module for setting and controlling billing and rating functions.
- Rate Tables are assigned for each LONG DISTANCE RESALE account

- Programmable Minimum and Incremental Billing Durations, in 6-second increments. First and additional increments set by account or destination number
- Programmable First Minute Rate and Duration in 6-second Increments (round up)
- Flexible Rate Plans per ANI
  Day/Evening/Night/Weekend/Holiday for destination number
  Day/Evening/Night/Weekend/Holiday blocking for destination number
  Incremental surcharges based upon ANI
  Rating based upon ANI and DNIS combination, to support intrastate billing
  Flat Rate Billing
  Free calls
- FinanceControl System Management: A full-featured billing system, "FC ," is under development and will be released soon. The System utilizes the data from the server's Call Detail Records to generate real time billing; Use of the SHS System replaces the Client software for the PhoneCard application. This means that in addition SHS's PhoneCard functionality SHS Systems incorporates their own screen menu selections and functionality.
- Billing Alternatives: One separate database file is created for each company, all with identical database layouts. One CDR database is created per company, per period. Periods may be configured for monthly, weekly or daily, and overwrite old data after one year. The formats of these databases are provided, and may be used by the client to produce bills through custom programming or exporting to a billing service bureau.

Fraud Control

- ANI blocking database
- Daily, Weekly and Monthly limits on usage, with warning tones, reorder, or VRU message upon reaching limits
- Invalid ANI may receive reorder or a VRU message played
- Call attempts with DNIS but no ANI may receive a tone or a VRU message
- Calls from an ANI that is not in the database may be:

  1. Blocked
  2. Blocked for a configurable period, with automatic reset after the period has expired
  3. Transferred to an operator (Keith confirm)
  4. Have the Information Digits looked up in a table and either be blocked or have the account created on the fly.

System Maintenance

- Bulk Loading of Accounts
  Via all user definable fields
  Log file for transaction errors
  Validation with existing account records
- Batch Changing/Updating of Accounts

Via all user definable fields
Log file for transaction errors

- All above functions may be performed via modem dialin using Windows RAS or PCAnywhere.

Long Distance Resale Key Metrics

ANI or Account Codes (up to 10 digits)
PIN (up to 13 digits)
Rate Tables (up to 500)
Area codes/Country Codes (up to 1800)

Other Specifications

The Long Distance Resale database maintains information relating to each Long Distance Resale account; each Long Distance Resale is considered an account.

All database files use a **FOXPRO** variant of DBase format, They are "opened shared" with FoxPRO indexes and record or file locking, Any user application that accesses the database must open the database files as "shared access" and must not keep a record locked for more than a fraction of a second as the *server may* stall waiting for a lock to release..

5.0 CALLBACK SYSTEM OVERVIEW

International calls from foreign countries can be very expensive. With the Callback System, a subscriber can call from and to any country for the same cost as a call originating from his home base, as long as the call could normally be made from his home base.

The Callback System is an standard module to the ADS system. The Callback system offers the subscriber a convenient alternative for international calling without the need for a regular long distance carrier or calling card. Callback, or re-origination, is a "network based" prepaid system where all data relating to the account resides on a database server accessible over the network. The system can be accessed from any phone.

When a subscriber calls into the ADS Callback System, the system will identify the subscriber, retrieve the callback number from the account record in the database server and then place a call to that number. There are several optional callback methods available in the system. When the subscriber answers the call, the callback method selected in the account record will be used for prompting and security. If the subscriber of the service is not going to be at the same location all the time, the Callback number may be changed by the subscriber from any phone.

The application, in conjunction with the ADS System, provides debit account call processing functions. In addition, the system can provide postpaid accounts, with a predefined limit. All of the functionality, account control and management are incorporated into the database on the server. Callback Accounts are issued to subscribers allowing prepaid calling capabilities with real-time debiting of the subscriber's account balance. When the prepaid amounts have been fully debited, no additional calls are allowed. The system will automatically update the remaining credit balance once the calls are completed. If the time available should reach less than one minute remaining during the call, the system will provide and automated announcement. At zero seconds remaining, the switch will automatically disconnect the caller. The system will automatically update the remaining credit balance once the call is completed. Configurable single-key or two-key-combinations may be pressed to re-originate the call if a balance remains, or to immediately disconnect both legs of the call.

The Callback application relies on the Application Development Switching system (ADS) for its call processing functions.

5.1 Callback Feature Summary

System Features

- VRU Integration: Refer to VRU section for details
- Two-digit Programmable Re-origination for B Leg or Both Legs
- Call Detail Records (CDR) in FOXPRO variant of Dbase
- Integration with FinanceControl system management software
- Remote dial-in to Server to perform all Client functions

Account Features

- Configurable Start Dial Prompt (dial tone, beep, voice menu)
- Multiple Callback Types
  - Direct - Upon callback, system prompts for PIN (if exists) or destination number (if no PIN exists)
  - Voice - Upon callback, system plays message prerecorded by callback account owner
  - Room - Upon callback, system plays a system message to transfer call to a room or extension number (previously entered by the callback account owner via DTMF)
  - Auto-Attendant - Upon callback, system plays DTMF tones previously entered by the callback account owner via DTMF
  - Phone Card - Allows Callback account owner to call a predefined number, and upon answer, the owner enters the callback DID number and PIN, and can then make calls out or update the callback parameters.
  - Transparent (Refer to functional Description Section below)

Callback Menu Options

- Change PIN number
- Change Callback Number
- Change Language
- Change Callback Type (method)
- Record Name and Room Number
- Check Balance
- Invoke Automatic Callback if Using Callback/Phone Card Method

Account Status Data

- Calls Active
- Previous In-Bound Usage
- Previous Out-Bound Usage
- In-Bound Usage
- Out-Bound Usage
- Last Call
- Activation Date

Billing and Rating

- Database applications use a common Rate Table Client module for setting and controlling billing and rating functions.
- Rate Tables are assigned for each card number
- Programmable Minimum and Incremental Billing Durations, in 6-second increments. First and additional increments set by account or destination number
- Programmable First Minute Rate and Duration in 6-second Increments (round up)
- Flexible Rate Plans per Card Number
  - Day/Evening/Night/Weekend/Holiday for destination number
  - Day/Evening/Night/Weekend/Holiday blocking for destination number
  - Flat Rate Billing
  - Free calls
  - One Billing CDR for A Leg
  - One Billing CDR for Each B Leg Call
- 24 Incoming Time Zones (programmable to the A leg of the callback)
- Grace Period (incoming (A Leg) calls with no outgoing answer within the grace period are not billed
- FinanceControl System Management: A full featured billing system, "FC ," is available via an alliance with FC Communications Inc. The billing system utilizes the data from the server's call detail records to generate real time billing.
- Billing Alternatives: One separate database file is created for each company, all with identical database layouts. One CDR database is created per company, per period. Periods may be configured for monthly, weekly or daily, and overwrite old data after one year. The formats of these databases are provided, and may be used by the client to produce bills through custom programming or exporting to a billing service bureau.

System Maintenance

- Bulk Loading of Accounts
  Via all user definable fields
  - Log file for transaction errors
  - Validation with existing account records
- Batch Changing/Updating of Accounts
  Via all user definable fields
- Log file for transaction errors
- All above functions may be performed via modem dial-in using Windows RAS or PC Anywhere.

Callback Key Metrics

- Company Numbers (up to 1000)
- Four Digit Pins
- Serial Numbers (up to nine digits)
- Rate Tables (up to 500)
- Area/Country Codes (up to 1800) per Rate Table one through nine digits per code
- 99 Languages are supported
- Base English Voice prompts are supplied, with the client providing custom prompts
- Re-tries (up to 15) to Establish a Connection (account configurable)

Technical Note

The Callback account database maintains information relating to each callback account, The DNIS and PIN are used as a compound tag to form a unique primary key (tag KEYO). The nine digit serial number is a unique secondary tag field and the account cross reference code field is the secondary key that need not be unique. The primary key will change if the PIN changes. When the PIN changes, the server will delete the record and add it with the modified key fields. The serial number and XDCCODE- will not change.

All database files use a FOXPRO variant of DBase format. They are "opened shared" with FOXPRO indexes and record or file locking. Any user application that accesses the database must open the database files as "shared access" and must not keep a record locked for more than a traction of a second as the server may stall waiting for a lock to release.

5.2 Transparent Callback

5.2.1. System Overview

Transparent callback provides the same cost benefits of regular callback, with an interface similar to a standard calling card. Multiple "local" systems (other switches, M100 units, or programmable dialers), via data link, are connected to a "callback" system (an SHS 2000 switch, typically in the U.S.) The callback account data resides on the server of the callback system. The local systems can invoke calls back from the callback system transparent to the user (refer to the "Transparent Callback Call Flow" description below). In addition, a transparent callback account may used for standard callback with the callback system, with all the features previously described. Database structure and CDR formats are the same for both versions of callback.

Up to nine local nodes may interface with one callback node with the standard serial port data link interface. Up to 999 local nodes may interface with one (or more) callback nodes using SHS's Front End Processor option.

Maintenance of accounts is performed through the same interfaces as with standard callback.

5.2.2 Transparent Callback Call Flow

1. Calling party dials access number for Local SHS 2000.
2. Local SHS 2000 host answers call and connects the calling party to Local VRU.
3. Local VRU prompts the calling party for account number and PIN.
4. Calling party enters account number and PIN.
5. Local VRU sends an account validation request containing the account number and PIN across the data link to Host server.
6. Host server receives account validation request from Local VRU. Host server looks up the account number in the Host server database and sends a response to the Local VRU containing the account status.
7. Local VRU receives account validation response from Host Server. If the account is active, the Local VRU plays the account balance and prompts the calling party to select placing a call or an account maintenance option (request balance, modify speed-dial, change PIN).
8. Calling party selects placing a call.
9. Local VRU sends a callback request containing the callback number to use across the data link to the Host Server.
10. Local VRU prompts the calling party to enter the destination number.
11. Host server receives a callback request from Local VRU. Host server sends a request to the Host SHS 2000 host to dial the callback number specified in the callback request.
12. Calling party enters the destination number.

13. Local VRU sends an outdial request containing the destination number across the data link to the Host Server.
14. Local SHS 2000 host receives an incoming call to the callback number. Local SHS 2000 host passes the incoming call without answering it to the Local VRU.
15. Host server receives the outdial request from the Local VRU. Host server sends a request to the Host SHS 2000 host to dial the destination number specified in the outdial request.
16. Host SHS 2000 host dials the destination number and connects the destination leg to the callback leg.
17. Called party answers, the Host SHS 2000 host notifies the Host server that the called party has answered. The Host server sends an outdial complete message across the data link to the Local VRU.
18. Local VRU receives the outdial complete message from the Host server and sends a connect request to the Local host to answer the incoming callback call and connect it to the calling party.
19. On calling party re-origination or called party disconnect, Host SHS 2000 host releases the destination leg and connects the callback leg to Host VRU.
20. Host VRU prompts calling party to select placing a follow-on call or other options.
21. If calling party selects other options, Host VRU disconnects from the callback leg causing the callback leg to be released. The Local SHS 2000 host detects the callback leg has released and connects the calling party to Local VRU for other options.
22. If calling party select to place a follow-on call, the Host VRU prompts the calling party to enter the destination number.
23. Calling party enters the destination number.
24. Host VRU sends requests sends a request to the Host SHS 2000 host to dial the destination number.
25. Host SHS 2000 host dials the destination number and connects calling party.

Transparent Callback: Part 1

Caller Dials Number, Enters PIN, and Account is Validated on Database on US Switch

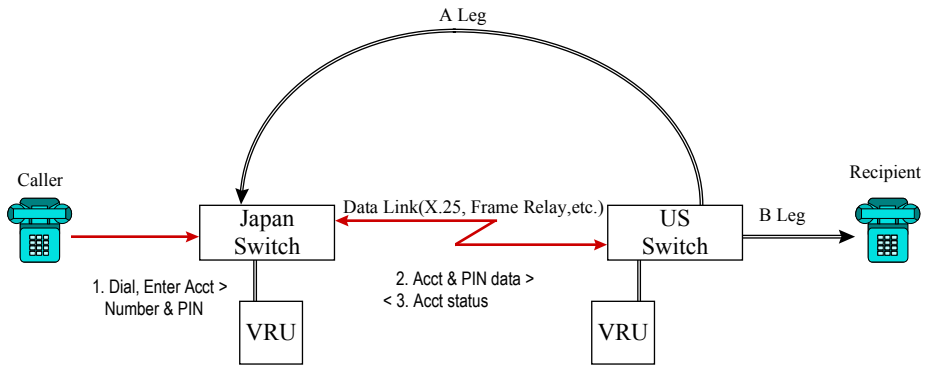

Transparent Callback : Part 2

Caller Selects Outgoing Call,
Enters Destination Number

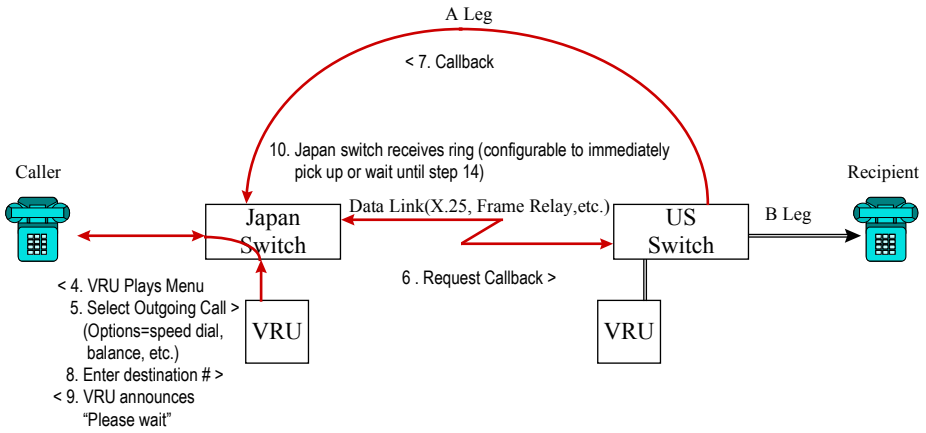

Transparent Callback: Part 3

Switch Dials Destination Number,
Upon Answer Passes Status to Japan Switch
Caller is Connected

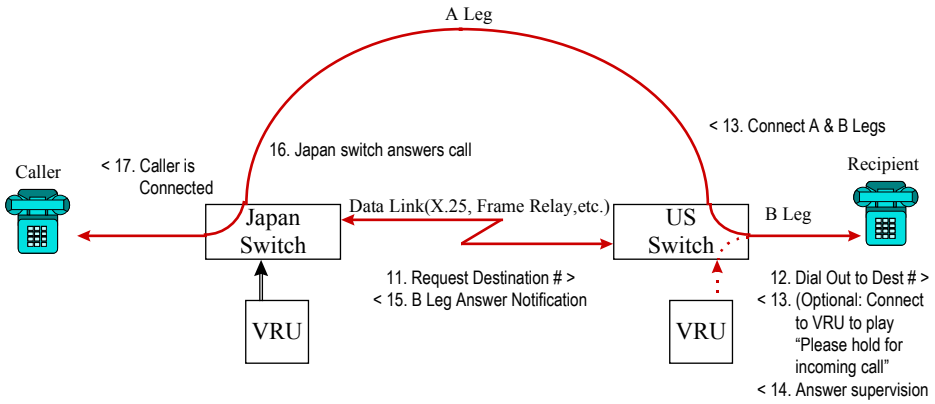

6.0 POSAR: POINT OF SALE ACTIVATION AND RECHARGE

SHS's POSAR provides the optimum flexibility and safety for retail outlets selling PhoneCards. SHS offers a number of methods to set PhoneCard usage and value at the point of sale. Key features include:

Point of sale "activation" of PhoneCards. Ship your cards to the retail outlet with no value, or with a preset value but not active. Only when the card is sold does the teller activate the card. With this feature, you can minimize losses due to theft or damage

Point of sale "recharge" of PhoneCards. Have your tellers collect at the register and add value to the PhoneCard

Multiple options. These include bar code reader support, custom programming, custom data link interfaces, DTMF phone-based activation, additional capacity and redundancy.

Audit trails and reports. The system provides reports of who activated or added value to the cards, the amounts, the time and date, and more.

Low balance notification messages. Users of your SHS SHS 2000 Debit Cards can hear a special message whenever their balance drops below a certain threshold. This message may include instructions for recharging the PhoneCard, either via in-call credit card recharge or returning to the store for point of sale recharge.

Functionality

PhoneCards are produced with a magnetic stripe, similar to credit cards. When a customer purchases a PhoneCard, the retail clerk presses a certain key on the standard card reader, swipes the PhoneCard through the card reader, and awaits confirmation. The card reader dials SHS's POSAR system, activates or recharges the card, and sends back a status.

6.1 POSAR PROCESS

SHS consults with you to successfully set up and implement POSAR. Below are the general steps we follow to get you started:

1. Select how your card reader will activate or recharge: by dial-in to SHS's POSAR system, or by dial-in to a service bureau.
2. If using a service bureau, determine the interface between the service bureau and SHS's POSAR system: dialup or dedicated link (X.25, 56KB, Bisynch)
3. Determine your maximum volume in simultaneous recharges/activations.
4. Purchase SHS's base POSAR system and selected options.
5. Program card readers, PhoneCards, modems, etc. and test.
6. Arrange programming of all card readers via your service bureau.

The Product

The base POSAR system provides you with the following:

- Consultative assistance
- SHS POSAR unit
- 8 dial-in modem ports or 1 dedicated data link (ASCII and X.25, 56KB or Bisynch)
- Standard data link format and specifications
- Installation
- 3 months support
- Magnetic stripe encoding setup for 6 batches of cards, no maximum limit per batch.

Encoding the Magnetic Stripe

The magnetic stripe contains a secret number (MAG PIN) that is different from the PhoneCard's PIN number. Thus, the PhoneCard's PIN may be hidden from the point of sale clerk (via scratch-off or peel-off label). To correlate the PhoneCard PIN with the MAG PIN requires an encoding process by SHS. SHS's SHS 2000 system has the capability to automatically export a batch of PhoneCard PINs to disk or diskette. These PINs are sent to SHS, who will produce corresponding MAG PINS, which SHS then loads into the POSAR unit. Turnaround from receipt of a batch of PINs is 5 business days or less.

Components

SHS provides the following POSAR components:

- Base POSAR system
- Encoding a batch of PINs, with no limit to the number of PINs in a batch.
- Additional dedicated link
- Additional 8 dialup modem port
- Touchtone phone-based activation of PhoneCards
- Custom enhancements or interfaces quoted upon request.

7.0 BILLING/ACCOUNTING/SYSTEM MANAGEMENT - FINANCECONTROL

7.1 Planning Overview

Planning is the most important aspect of managing a billing system. This needs to be completed prior to implementing and maintaining a successful billing system. It is very easy to let the day-to-day crisis blur your focus on the final outcome. The recommendations in this manual are geared towards improving your management decisions by making you aware of some of the things that need to be decided on in advance, as well as recognizing contingency factors in each of the areas.

We recommend that each new customer plan all of the following tasks:

HARDWARE - Local Area Networks, Servers, Workstations, Printers, Peripheral Equipment, Hard Disk Space and Telephony Connections

SOFTWARE - Storage for each component of the integrated system

ORGANIZATIONAL - Each major task should have someone managing the applications

DISASTER RECOVERY - Murphy was right - plan for disaster

SECURITY PLANNING - Establish internal controls to prevent fraud and data loss

7.2 Hardware

Hardware Planning is the first major task you will need to perform. Each system has its own requirements based on the location of servers, workstations, current business volume, and growth expectations. Remember to plan accordingly so that each component is properly installed and there is timely delivery. Usually, this has hindered companies in the past and lengthy delays have occurred due to individual components being back ordered, etc.

SHS does not sell or support hardware or networks. It is recommended that each customer find a reliable local source for your computers and networking equipment. SHS suggests that you have an emergency loaner policy with each supporting vendor and recommends negotiating a support contract with a response time of no more than 2 to 4 hours.

7.2.1 FC Server

FinanceControl™ is a client server software with at least two servers. SHS requires its own server that is distinct from your switch server. The "FC Server" will store all of the **FinanceControl™** master and transaction data files. Your "Switch Server" will store all switch-related files.

Most of your mission critical service and CDR billing information, which is stored on your Switch Server, is duplicated on the FC Server. This means that if a major disaster occurs, SHS can help you recover. It is always good to have data stored in more than one place.

The FC server must be a Pentium 200MHz (or greater) server running Windows NT Server or Novell Operating System. RAM requirements differ depending on hard disk size and the number of workstations connected. In most installations, 64MB to 128MB of RAM is recommended but the higher the better. Please consult your respective vendor for exact recommendations.

Servers should be fast and simple. Disable all fancy screen savers, set your monitor to simple VGA, and allow the server to work as a dedicated machine whose only purpose is to provide files to workstations.

7.2.2 SERVER HARD DISK

Each server must have enough reliable data storage to handle your expected usage. Remember the value of your data and the cost of being "down". If your company is earning $1 Million per month in business, each day of CDR data is valued at approximately $33,000.

Hard disk solutions can be stand alone, mirrored or connected in a RAID (Redundant Array of Inexpensive Disks) Array. We recommend the RAID technology because one drive can completely fail without any data loss. This reliability is a trade-off between increased hardware cost(s) and slower data write times.

Normal entry systems are configured with 8GB to 16GB of hard disk space. Please calculate hard disk requirements based on your expected usage. Remember that you need to take your system down to add hard disk(s) so be sure to compensate for growth.

The following table can be utilized to assist you in calculating drive space / storage requirements.

Number of Customers	_____	/ 100	=	_____	MB
Number of Services	_____	/ 1000	=	_____	MB
Number of Call Detail Records	_____	/ 2000	=	_____	MB
Number of Months of Summary Bills Required (Month____ x Number of Customers_____)	_____	/ 2000	=	_____	MB
Number of Bill Detail Records (Not all CDR Data create Bill Details) (Month____ x Bill Entries Per Month_____)	_____	/ 2000	=	_____	MB

Multiply the final outcome by the value '5' and you will have a reasonable estimate of your requirements.

7.2.3 SERVER NETWORK

Each FC Workstation requires a high-speed data connection to your FC Server. Switches also require workstations that need their data to have a high-speed data connection. If your switch and FC Server are located in the same geographic area, Ethernet (10 Megabits per second) or fast Ethernet (100 Megabits per second) is recommended. If the FC Server and the Switch Server are located in geographically distinct locations, connect them with at least a T1 (1.544 megabits per second), using TCP/IP protocol and routers (not bridges).

A 10Mbps Ethernet link will handle most small accounts. Faster 100Mbps networks are needed when the volume increases beyond the Multi-Million mark.

7.2.4 WORKSTATIONS

FinanceControl™ is a client server software. It **must** run on a **client workstation** with the data stored on a **central server**.

Client Workstations require:

Pentium 200 megahertz (or greater)
At least 64MB of RAM
8MB of Virtual Memory available
250 MB of *free* hard disk space as well as work space for temporary files
The ability to run on either Windows 95 or Windows NT Workstation (version 3.5)

FinanceControl™ is licensed for up to five workstations in the standard license. Additional workstation licenses are available at an additional expense. **FinanceControl™** can easily work with dozens of workstations operating simultaneously as long as your network can support the volume and data.

7.2.5 PRINTERS

If your organization prints bills, then printing could be your biggest "bottle neck".

Bill Printing on an HP LaserJet VSI is at about 24 pages per minute including graphics. Higher speed printers are available but are very expensive (up to $250,000). Folding and stuffing machines are also very expensive (up to $500,000).

To calculate your printer requirements - please use the following:

Number of Customers _____ **X** Pages per Bill _____ **/** 25 pages per minute **=** _____ number of pages per minute

Maximum Printing Period Acceptable _____ minutes

Number of Printers Required _____ **=** _____ Number of Minutes Printing divided by Maximum Printing Period

4MM / 8MM DAT Drive Tape Backups are a requirement. Data is more valuable than most people realize. Backup all FC files as well as your switch files. One key consideration is that open files are not backed up. Most backup systems will skip these. One way to circumvent this is to copy files to a secondary source and then backup the copy. It is important to double check with your programmable switch manufacturer to ensure that all files are being backed up correctly.

7.2.6 MODEMS

SHS currently recommends using a US Robotics brand external modem with a baud rate of 33.6kbps or faster. US Robotics has an online website on the Internet as well as providing excellent technical support. The address of their website is support@usr.com.

These modems can generally be purchased for approximately $150 per licensed copy.

7.2.7 BAR CODE READERS (OPTIONAL - 1 Per WORKSTATION DOING RECEIPTS)

Do not consider utilizing wands for processing receipts as they do not stand up to volume. SHS recommends using a SYMBOL LS7000 or greater laser scanner with Smart Stand. Make sure that any scanner that is purchased supports Code 39 and Code 128 bar codes. You may also want UPC if you plan on selling inventory. These units cost approximately $1,500 per unit (installed) including the keyboard interface. As always, SHS also advocates purchasing an extended service contract.

In order to insure compatibility, do not purchase slot scanners without first consulting with SHS to ensure compatibility.

7.2.8 RECEIPT PRINTERS (OPTIONAL - 1 Per WORKSTATION DOING RECEIPTS)

FinanceControl's™ Cash Receipts function allows for printing of receipts, endorsing checks and documents, as well as receipt tapes for bank deposit submissions. All of these items are optional.

SHS recommends the Ithaca Model 53 with the capacity of 15 column document endorsement or better. Expect to spend $700 per workstation for a quality receipt printer.

7.2.9 POLE DISPLAYS (OPTIONAL - 1 Per WORKSTATION DOING RECEIPTS)

Pole displays are attached to a COM Port. Most allow for 20 character displays. UDS, IDC, or MICROBIZ are reliable brands. For this option, anticipate an additional $300 per unit for each workstation that processes receipts.

7.3 SOFTWARE PLANNING

The following software components will be stored on your network.

7.3.1 Vendor Software

The following pages outline some of the software FC uses to support their clients and also provides useful information on acquiring the software from the vendors who support the product.

Microsoft FoxPro	Microsoft Corporation
NetOP	NetOp

7.3.2 MICROSOFT FoxPro

FoxPro is a Microsoft product developed for data management and the primary language for the **FinanceControl™** source code. FoxPro is a dbase / xbase derivative used for cataloging, tracking and processing large customer databases.

FoxPro has an elegant user interface that makes data management easy. This allows users to easily store and retrieve large amounts of data and produce reports based on the data processed.

The FoxPro language consists of two elements - commands and functions. A command performs an *action*, a function returns a *value*. Commands and functions can be combined together to create a FoxPro statement.

FoxPro programs, composed of FoxPro commands, provide incredible power to manipulate data. FC utilizes the full capabilities of FoxPro as provided by the FoxPro language.

Please contact Microsoft directly or your local distributor to obtain a copy of the software. Their online website address is www.microsoft.com.

7.3.4 Organizational Planning

For successful implementation of **FinanceControl™**, it is recommended that serious planning should be conducted before the installation process begins. SHS has provided helpful tips with processing steps to assist in the planning of organizing responsibilities for a company who purchases the **FinanceControl™** software package.

8.0 REMOTE MAINTENANCE MODULE

8.1 Overview

This section describes the features of SHS's Maintenance Module.

SHS Alarm Proxy
Provides switch alarm information to central alarm reporting location via a RS232 serial port. Logs all alarms received.

SHS Switch Log Proxy
Provides switch log information to a remote reporting location via a RS232 serial port. Logs all switch log information received.

SHS Paging Service
Provides paging or E-mail notification of alarm conditions in the switching complex. Requires Alarm Proxy

SHS Host Security Service
Prevents accidental closure of the NT ADS host application

SHS Server Security Service
Prevents accidental closure of the NT Server host application

8.2 Call Processing Capabilities

Notification - The system notifies the switch tech of call failure or an alarm, with enough information in the notification to have the tech determine the next course of action. The system provides for 3 pagers to be notified. The location, type of trouble, severity, and Span ID are sent.

Logging - There is a central location where all alarms are logged, so one "event log" file may be reviewed to evaluate system performance of all components. This file has the ability to be shared, so other automated systems may read the file and perform their own notifications.

Format. The format of the alarm includes enough information to be useful to the technician for a page, and includes more information in the log file. Information includes:

1. Entry Number (One per alarm, so the Tech refers to this item in the Log
2. Service Affected (PhoneCard, Callback, LONG DISTANCE RESALE, LCR, Unknown)
3. Date & Time
4. Component (Switch (and board if possible), Host1, Host2, Server1, Server2, VRU1, VRU2, Hub1, Hub2, Network, etc.)
5. Span and Channel
6. Severity
7. Alarm started or cleared
8. Nature of Problem
9. Useful text describing problem or action to solve.

Alarm Types

1. Alarms corresponding to ADS Host alarms
2. Alarms based on Server performance
3. Alarms based on VRU performance
4. Alarms based on Host or Server Switchover

9.0 CELLULAR SYSTEM OVERVIEW

Cellular (PPC) is an optional module to ADS (Applications Development System). The PPC system offers cellular customers a convenient alternative to pressing the send button on a mobile phone and waiting to receive a bill. The PPC system provides service to cellular customers who choose to pay up front, i.e., air time is monitored and debited in real time.

9.1 Cellular Software

Cellular utilizes the functionality of ADS to process all cellular service calls. This application is where the customer database is stored, and all activity for the accounts are recorded.

9.2 Rate Table Software

The Rate Table application is necessary for rating all Cellular calls coming in to the SHS Server. The Rate Table software allows for determining the cost of a call from the switch's location to any area code in the United States and to each country.

9.3 PhoneCard Software

PhoneCard is a calling card application in which subscribers can purchase a debit card and have their account debited as calls are made. The calling card, when used with the Cellular application, can be used as a balance transfer card. This means that a Cellular subscriber can transfer the funds from their Phone Card account to their PPC account using their cellular phone. This is called a Phone Card to MIN Transfer. Reasons for a PhoneCard to MIN Transfer may include that the subscriber runs out of money on their PPC account and needs immediate funds, or they know ahead of time they'll need more funds than their current balance allows. (Refer to the *Additional Features* section of Chapter 1 for more detailed information on Phone Card to MIN Transfer of Funds.)

9.4 FEATURES

The way this fits into the cellular world is that a customer purchases a cellular phone. The phone has already been issued a pre-assigned phone number. This phone number is called the ANI (automatic number identification), or in this case, the MIN (mobile identification number). The MIN becomes the account number for the subscriber. Each time the subscriber uses their cellular phone to make a call, the call is routed through the SHS Server for validation of the MIN, rating of the call, and verification that the account has sufficient funds. Once validated, the call is routed to an outgoing trunk via the Digit Table.
There are two ways in which an incoming trunk can be flagged: PPC Land or PPC Mobile. PPC Land is when a call is made <u>to</u> a subscriber's cellular phone. In this case, the dialed number becomes the MIN. PPC Mobile is when a call is made <u>from</u> the subscriber's cellular phone. The ANI (phone number of the cellular phone) becomes the MIN. The configuration of the incoming trunks is vital for routing and rating purposes.

There are also non-roaming and roaming considerations when configuring the PPC system. Non-roaming is when a cellular subscriber makes a call within their designated calling area. This area is called the Home System. When a call is made within the Home System, the subscriber is generally charged a fixed per-minute rate.

Roaming is when the cellular subscriber makes a call from outside their designated calling area. Each roaming area has its own rate. Therefore, when the cellular subscriber turns on their cellular phone outside their Home System, the cellular tower for that area attempts to validate the MIN. When the MIN is not found in their database, the subscriber is issued a TDN (Temporary Directory Number). The PPC System then translates the TDN to the subscriber's MIN and debits the account accordingly.

NOTE: Cellular Version 4.18 does not address roaming service. Roaming features will be added to Phase II of the Cellular application.

Call Types
Within the Cellular system, there are three different non-roaming call types: Land to Mobile, Mobile to Land, and Mobile to Mobile. Each call type is unique in how the ANI and DN (dialed number) is presented to the system.

9.4.1 Land to Mobile

In a Land to Mobile scenario, a non-cellular caller dials the number (MIN) of the subscriber's cellular phone. The call is routed to the MTSO (Mobile Telephone Switching Office). The MTSO routes the call to ADS on an incoming trunk in the form of ANI/DN. (In this case, the DN is the MIN. The ANI is the calling party's number and is not used for routing purposes.) The incoming trunk is flagged for PPC Land. The SHS Server validates the MIN (in this case, the DN), rates the call based on the MIN (DN), then completes the call and debits from the account number. The PPC system terminates into the MTSO.

If a call is placed to a PPC subscriber and their account has insufficient funds, the land caller will hear a message such as "the number you dialed is not available at this time". If sufficient funds are available, the call is rated and the "minutes for this call" prompt is played to the PPC subscriber prior to connecting the call.

Re-origination is not used in a Land to Mobile call type, i.e., the PPC subscriber cannot put the caller on hold and dial another number.

9.4.2 Mobile to Land

In a Mobile to Land scenario, the PPC subscriber dials a non-cellular number from their cellular phone. The call is routed to the MTSO. The MTSO routes the call to ADS on an incoming trunk in the form of ANI/DN. (In this case, the ANI is the MIN since the ANI is the PPC subscriber's phone number.) The incoming trunk is flagged for PPC Mobile. The SHS Server validates the MIN, rates the call based on the ANI, then completes the call and debits from the account number. The PPC system terminates into the MTSO.

Re-origination is not used in a Mobile to Land call type, i.e., the PPC subscriber cannot put the called party on hold and dial another number.

9.4.3 Mobile to Mobile

The Mobile to Mobile scenario is unique in that the call utilizes four (4) designated trunks from the MTSO. A PPC mobile call comes into the MTSO, the MTSO recognizes the call as a mobile number and routes the call, via a designated trunk, to the SHS system for verification of the MIN. The PPC system verifies and routes the call back to the MTSO via a second designated trunk. The MTSO routes the call back to the SHS system, via a third designated trunk, for verification of the dialed number. The DN is verified and the call is routed to the MTSO via a fourth designated trunk. The MTSO then routes the outgoing call as normal.

9.5 Customer Care

Cellular provides a Customer Care option which allows a subscriber to speak with two different types of operators: internal customer service operators and telephone company operators. The system receives a unique DN defined by the Service Provider and the MTSO, i.e., 611. The subscriber hears a message prompt, "press 1 for customer service, press 2 for questions regarding coverage". This option is configured in the ADS portion of the system.

Both operator types can complete calls for the user by entering the MIN and DN during the transfer process.

9.6 Phone Card to MIN Transfer of Funds

The subscriber purchases a debit card. This card may be used to transfer funds from their debit account to their PPC account. The subscriber must be in their home area and must use their own cellular phone in order to make a Phone Card to MIN transfer. The entire balance of the Phone Card account is transferred to the MIN account. Partial transfers are not allowed.

When the transfer process is initiated by the subscriber, a unique DN is received on the incoming call. The ANI received on the call is the MIN or account code. The system routes the call to a VRU. The VRU prompts for the Phone Card number of the card. The Phone Card account is verified in the Phone Card database. If valid, the system automatically transfers the entire remaining balance of the Phone Card account to the MIN account. A prompt is played to notify the user that the transfer is complete, with the amount of money that has been transferred. If the Phone Card account is invalid, the system allows for one more chance to enter a valid number. If the Phone Card account is in use while attempting to make a transfer, the transfer is rejected.

Once a transfer of funds takes place, a transaction is written to a separate database (refer to Appendix H, Transfer Database) that includes the transfer date/time and to what MIN account the balance was transferred. The Phone Card card is marked as 'inactive' with no money. The system then updates the MIN account balance as well as marks the account active.

If Phone Card to MIN Transfers are allowed for MIN accounts that are out of money, the option number or DNIS used for this feature must be programmed in the rate table as a free call.

9.7 Fraud Control

The Cellular application provides fraud control in that there are no retries on an invalid MIN. If the first attempt to enter a MIN fails, the call is dropped with an appropriate VRU message such as, "You have entered an invalid MIN, please conPhone Cardt customer service".

In the case of a failed Phone Card to MIN Transfer, a record is written in the Transfer Database with a zero value. This allows for the billing system to scan for zero value transfers and report possible fraud attempts.