RECEIVED

2016 NOV 22 A 11: 10

Before the
FEDERAL COMMUNICATIONS COMMISSION
Washington, D.C. 20554

ORIGINAL

POSTED NOV 23 2016

In re Applications of	)	
	)	
Apple 107.1, Inc.	)	
	)	
For modification of the facilities of FM Translator Station W292DV, Long Island City, New York	)	File No. BPFT- 20161116AAH
	)	

Accepted / Filed

NOV 21 2016

Federal Communications Commission
Office of the Secretary

To: Marlene H. Dortch, Secretary

For transmission to: Peter H. Doyle, Chief
Audio Division, Media Bureau

PETITION TO DISMISS OR DENY

1. Press Communications, LLC ("Press"), licensee of Station WKMK(FM), Eatontown, New Jersey, hereby petitions to dismiss or deny the above-captioned application of Apple 107.1, Inc. ("Apple") for modification of the facilities of FM Translator Station W292DV (the "Translator"). Apple's repeated efforts to operate the Translator have conclusively established that Press's Station WKMK(FM) – *which operates on the same channel as the Translator* – has considerable listenership throughout the area which the Translator would serve with its proposed facilities. Importantly, Apple's repeated efforts have also conclusively established that operation of the Translator has caused interference to those listeners – so much so that the Translator was forced by the Commission to suspend operation from two different sites. As demonstrated below, Apple's newly-proposed facilities will similarly cause interference to WKMK listeners over highly-populated areas where WKMK's signal is regularly received. Because of that, Apple's application should not have been accepted, *see* Section 74.1204(f), and it should now be dismissed or denied.

BACKGROUND

2. As the Commission is presumably aware, the Apple Translator has been a source of controversy for more than five years already. Apple initially applied for its Translator in 2003, specifying Channel 296 as its operating channel. That application was granted in 2009. The Translator does not appear ever to have operated on Channel 296. Instead, by an application (File No. BMPFT- 20100812ACG) granted on February 25, 2011, Apple moved from Channel 296 to Channel 293. Before the ink was even dry on that permit, however, Apple filed another application (File No. BPFT-20110225ABV) proposing yet another channel change, to Channel 292 – co-channel to Station WKMK. That application was granted and in early May, 2011, Apple commenced operation.

3. Press was immediately notified by hundreds of WKMK listeners that they were suddenly experiencing substantial interference to their reception of Station WKMK. Such interference should not have surprised anyone, given the geographic proximity of the Apple Translator and WKMK and the fact that they were operating on the same frequency, *i.e.*, 106.3 MHz. Press brought the interference complaints to the Commission's attention on May 9, 2011, submitting the names and addresses of several hundred listeners who had complained to Press. By May 12, 2011, the Commission had ordered Apple to cease operation of the Translator.

4. Apple then filed yet another application (File No. BPFT- 20111018ABX) to move to yet another channel, this time Channel 284. That move was opposed by the licensee of WSPK, which operates on Channel 284. Presumably recognizing that that avenue was not available to it, in February, 2012, Apple amended its application to return to Channel 292 with different facilities (*i.e.*, lower power, lower antenna height, different location) than had been authorized in 2011. That application, as amended, was granted in March, 2012, despite the fact that the Apple

Translator remained on Station WKMK's channel and none of the complaints previously brought to the Commission's attention had even been addressed, much less corrected.

5. Apple resumed operation of the Translator on Channel 292 in April, 2012. Press promptly heard from hundreds of its listeners that they were again encountering interference. Press in turn alerted the Commission, which (at Press's suggestion) encouraged Apple and Press to undertake "on-off" testing. Based on such testing the Commission concluded that the Translator was in fact causing interference to WKMK. Accordingly, the Commission ordered Apple to "immediately" reduce the Translator's power to five watts. Apple operated briefly with those reduced facilities, during which time Press received approximately 40 additional complaints. Before the source of those instances of complained-of interference could be conclusively determined, however, Apple ceased operation.[1]

6. In March, 2013, Apple acknowledged a point that Press had urged a year earlier, but which Apple had side-stepped – that the site specified in Apple's 2012 construction permit was unusable. Accordingly, Apple sought special temporary authority ("STA") to operate from a building in Long Island City with four watts of power. *See* BSTA-20130320ABV. That STA was granted in November, 2013, but Apple did not resume operation of its Translator with the STA facilities until March 21, 2014, at which point it submitted an application for permanent authority to operate from the Long Island City site with 40 watts of power, *i.e.*, ten times the power of its STA operation. While Press had theretofore received no listener complaints arising from Apple's reduced power STA operation, the ten-fold increase in power would have expanded the

---

[1] Based on the location of the complainants and the general nature and timing of the interference they have reported, Press has reason to believe that the interference was attributable to the Translator. During the period the Translator ceased operation, Press received no complaints of interference.

Translator's signal into areas previously identified as locations from which Press's listeners have complained about interference from the Translator's operation from previous sites. Accordingly, Press opposed Apple's 2014 application on April 11, 2014. Shortly thereafter, Apple amended its application to reduce the proposed power to four watts. Press did not object to the application as amended and it was granted.

7. Apple is now proposing to double the Translator's power and modify its directional pattern in a way that will increase its signal in the direction of Station WKMK approximately 100-fold. Despite – or, perhaps, because of – the extended history described above, Apple's application contains no mention of WKMK or the need not to interfere with WKMK's regular listeners. But, as demonstrated in Attachment A, the Translator's proposed 60 dBu signal will extend over a large swath of territory in New York throughout which Station WKMK enjoys regular listenership, as Press has demonstrated several times over the course of the last five years. As a result, the Apple application must be dismissed.

DISCUSSION

8. Apple's application should not have been accepted in the first place. Section 74.1204(f) expressly prohibits acceptance of an application if the predicted 1 mV/m field strength contour would overlap a populated area already receiving a regularly used, off-the-air signal of any authorized co-channel station and grant of the authorization will result in interference to the reception of such signal. Here the Commission is well aware from direct experience in 2011 and 2012 that Station WKMK enjoys extensive listenership throughout the Northern New Jersey/New York City area where the Translator is attempting to squeeze in. Among the hundreds of complaints received by Press in 2011 and 2012 – many of which were submitted to the Commission – multiple listeners listed addresses within Apple's newly proposed

60 dBu contour, thus establishing that WKMK is regularly received in that area. Moreover, also as Press has previously demonstrated, WKMK's signal in those areas is less than 50 dBu. *See* Attachment A. In other words, the Translator's signal would substantially *exceed* that of WKMK in those areas, thereby unquestionably causing interference to WKMK. That being the case, the limitations of Section 74.1204(f) are satisfied here and the above-captioned application should be dismissed.

9. Press regrets having to present yet again essentially the same arguments concerning Apple's Translator, but those arguments remain valid: the Translator, operating on WKMK's channel in an area in which WKMK has established listenership, has repeatedly caused interference to WKMK and, absent some unanticipated changes in the laws of physics, will continue to do so if the Translator is permitted to operate with anything more than its current, minimal, STA facilities.[2] WKMK is a full-service station which, as a primary service, is entitled to priority over secondary service facilities such as the Translator. Under these circumstances, continued authorization of the Translator at all disserves WMKM's audience and runs counter to the longstanding regulatory hierarchy within the FM service; at a minimum, the increase in power and modified directionalization proposed in the above-captioned application must be rejected.

---

[2] This is not to say that those STA facilities do not themselves cause interference – they do. But, as indicated above, Press has thus far not received any complaints about that interference and, until such complaints are received, Press cannot assert with confidence that WMKM has listeners within the interfering reach of the Translator's STA operation.

WHEREFORE, for the reasons stated, Press Communications, LLC submits that the above-captioned application should be dismissed or denied.

Respectfully submitted,

/s/ Harry F. Cole Harry F. Cole STR
Harry F. Cole

Fletcher, Heald & Hildreth, P.L.C.
1300 N. 17th Street – 11th Floor
Arlington, Virginia 22209
703-812-0483
cole@fhhlaw.com

Counsel for Press Communications, LLC

November 21, 2016

ATTACHMENT A

W292DV - NEW YORK, NY
60 dBu COVERAGE MAP
CP 4 W-DA & APP 8 W-DA

Potential Interference to
WKMK Ch. 292A - Eatontown, NJ
November 2016

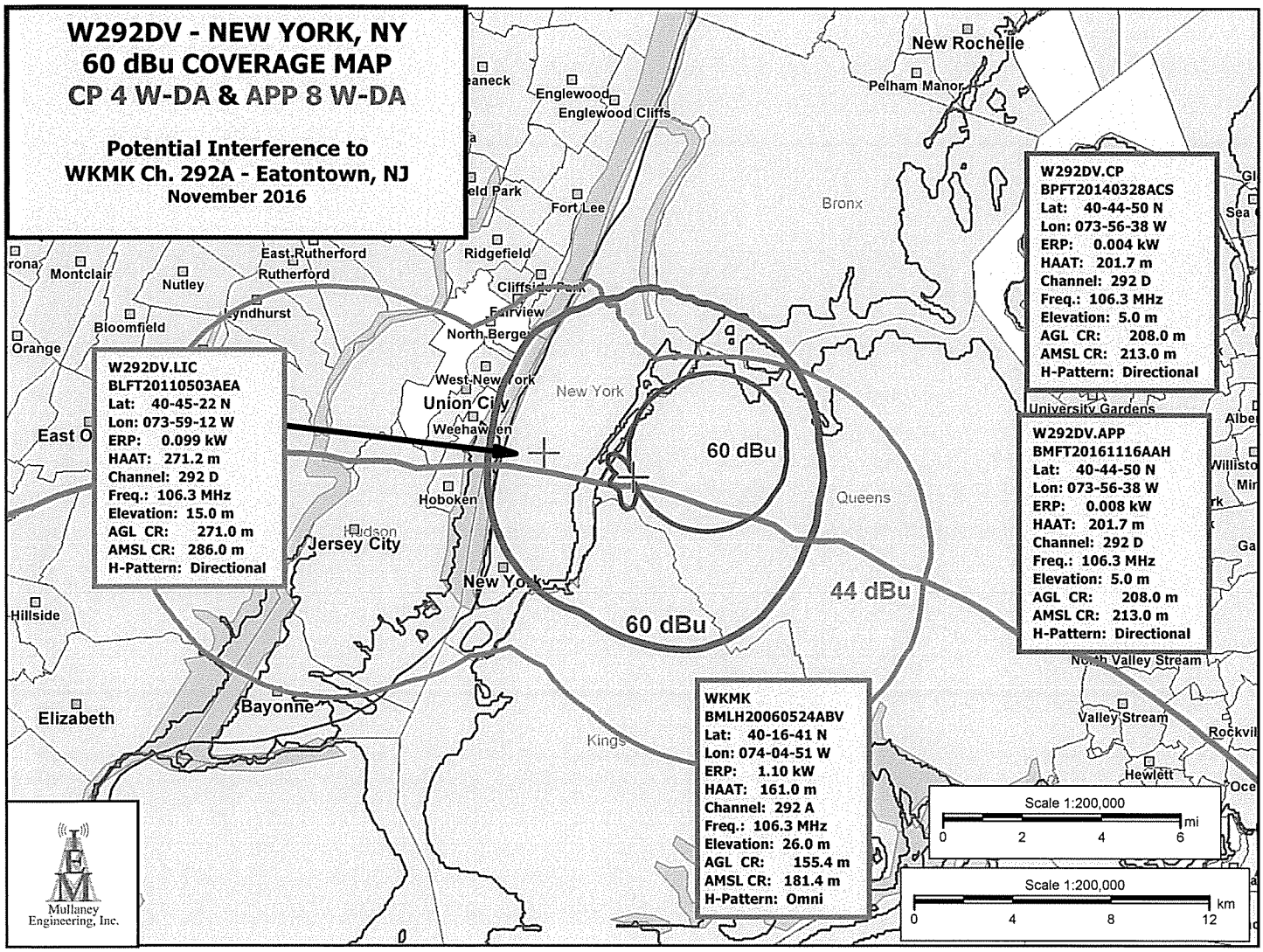

W292DV.LIC
BLFT20110503AEA
Lat: 40-45-22 N
Lon: 073-59-12 W
ERP: 0.099 kW
HAAT: 271.2 m
Channel: 292 D
Freq.: 106.3 MHz
Elevation: 15.0 m
AGL CR: 271.0 m
AMSL CR: 286.0 m
H-Pattern: Directional

W292DV.CP
BPFT20140328ACS
Lat: 40-44-50 N
Lon: 073-56-38 W
ERP: 0.004 kW
HAAT: 201.7 m
Channel: 292 D
Freq.: 106.3 MHz
Elevation: 5.0 m
AGL CR: 208.0 m
AMSL CR: 213.0 m
H-Pattern: Directional

W292DV.APP
BMFT20161116AAH
Lat: 40-44-50 N
Lon: 073-56-38 W
ERP: 0.008 kW
HAAT: 201.7 m
Channel: 292 D
Freq.: 106.3 MHz
Elevation: 5.0 m
AGL CR: 208.0 m
AMSL CR: 213.0 m
H-Pattern: Directional

WKMK
BMLH20060524ABV
Lat: 40-16-41 N
Lon: 074-04-51 W
ERP: 1.10 kW
HAAT: 161.0 m
Channel: 292 A
Freq.: 106.3 MHz
Elevation: 26.0 m
AGL CR: 155.4 m
AMSL CR: 181.4 m
H-Pattern: Omni

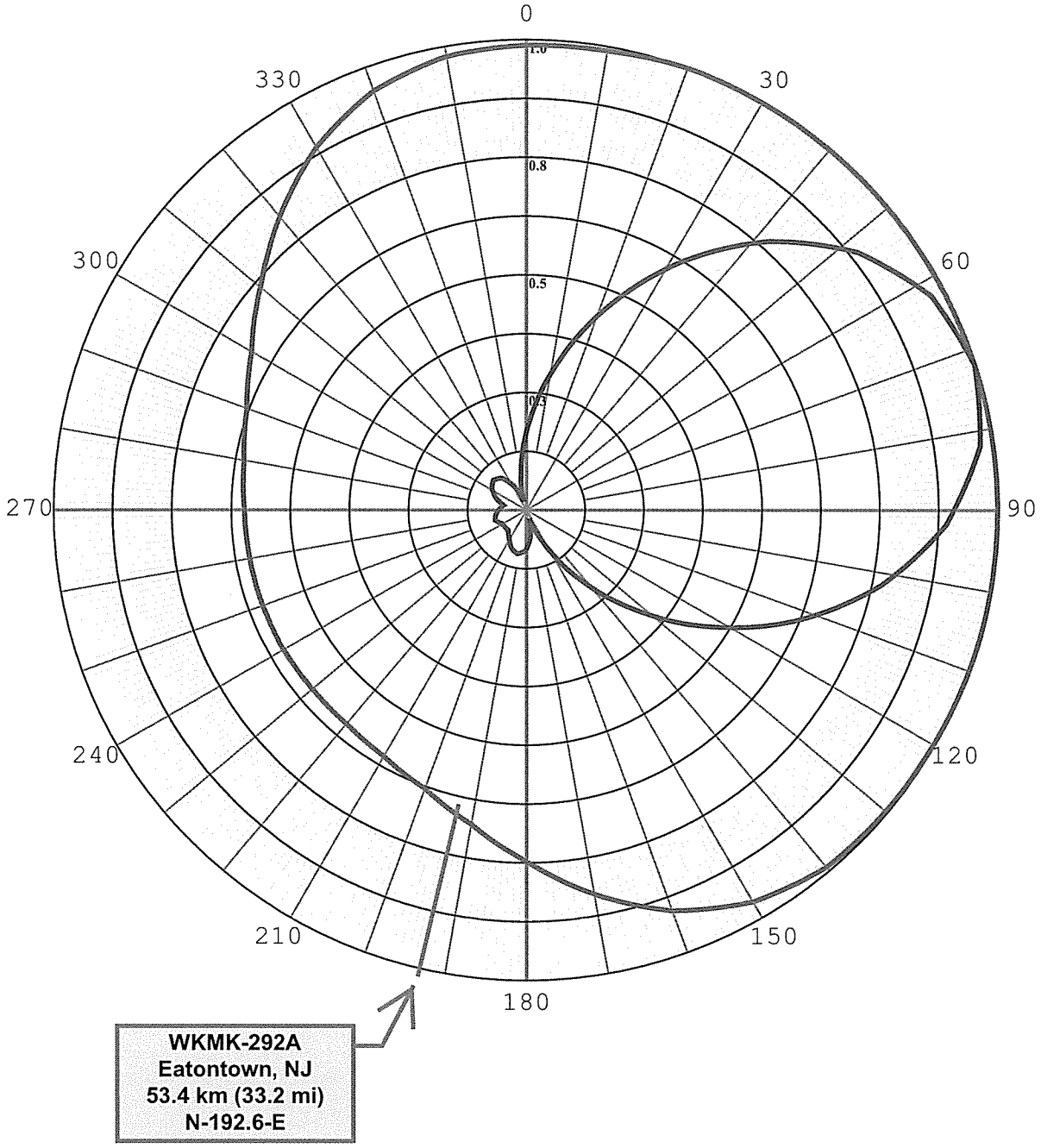

ANTENNA PATTERN - RELATIVE FIELD

Mullaney Engineering, Inc.

CP: BPFT-20140328ACS 4 W-V_Pol
APP: BMPFT-20161116AAH 8 W-H/V_Pol

Apple 107.1, Inc.
W292DV - 106.3 MHz - New York, NY

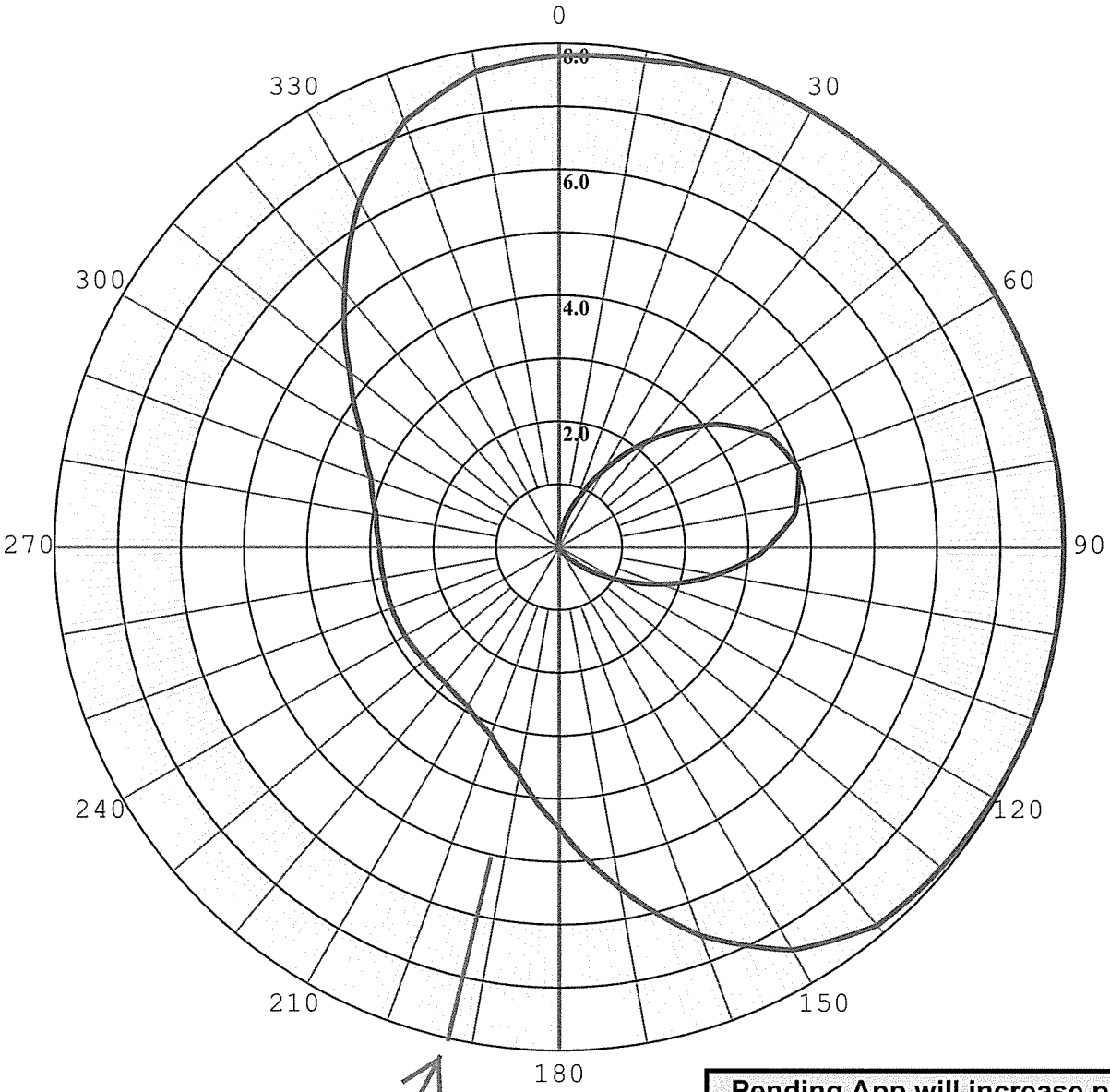

WKMK-292A
Eatontown, NJ
53.4 km (33.2 mi)
N-192.6-E

Pending App will increase power in direction of WKMK by 100 times.
CP: 0.032 Watts
App: 3.2 Watts

ANTENNA PATTERN - WATTS

Mullaney Engineering, Inc.

CP: BPFT-20140328ACS 4 W-V_Pol
APP: BMPFT-20161116AAH 8 W-H/V_Pol

Apple 107.1, Inc.
W292DV - 106.3 MHz - New York, NY

CERTIFICATE OF SERVICE

I, Harry F. Cole, hereby certify that, on this 21st day of November, 2016, I caused a copy of the foregoing "Petition to Dismiss or Deny" to be transmitted electronically, or placed in the U.S. mail, first class postage prepaid, addressed to the following:

Peter H. Doyle, Chief (peter.doyle@fcc.gov)
James Bradshaw, Deputy Chief (james.bradshaw@fcc.gov)
Robert Gates (robert.gates@fcc.gov)
Audio Division, Media Bureau
Federal Communications Commission
445 12th Street, S.W.
Washington, D.C. 20554
peter.doyle@fcc.gov
(*Electronic service only*)

John C. Trent, Esquire
Putbrese Hunsaker & Trent, P.C.
200 South Church Street
Woodstock, VA 22664
fccman3@shentel.net
(*First class U.S. mail*)

/s/ Harry F. Cole Harry F. Cole STE
Harry F. Cole